FBV INC.®
Engineered Solutions

TRUNNION

BALL VALVE

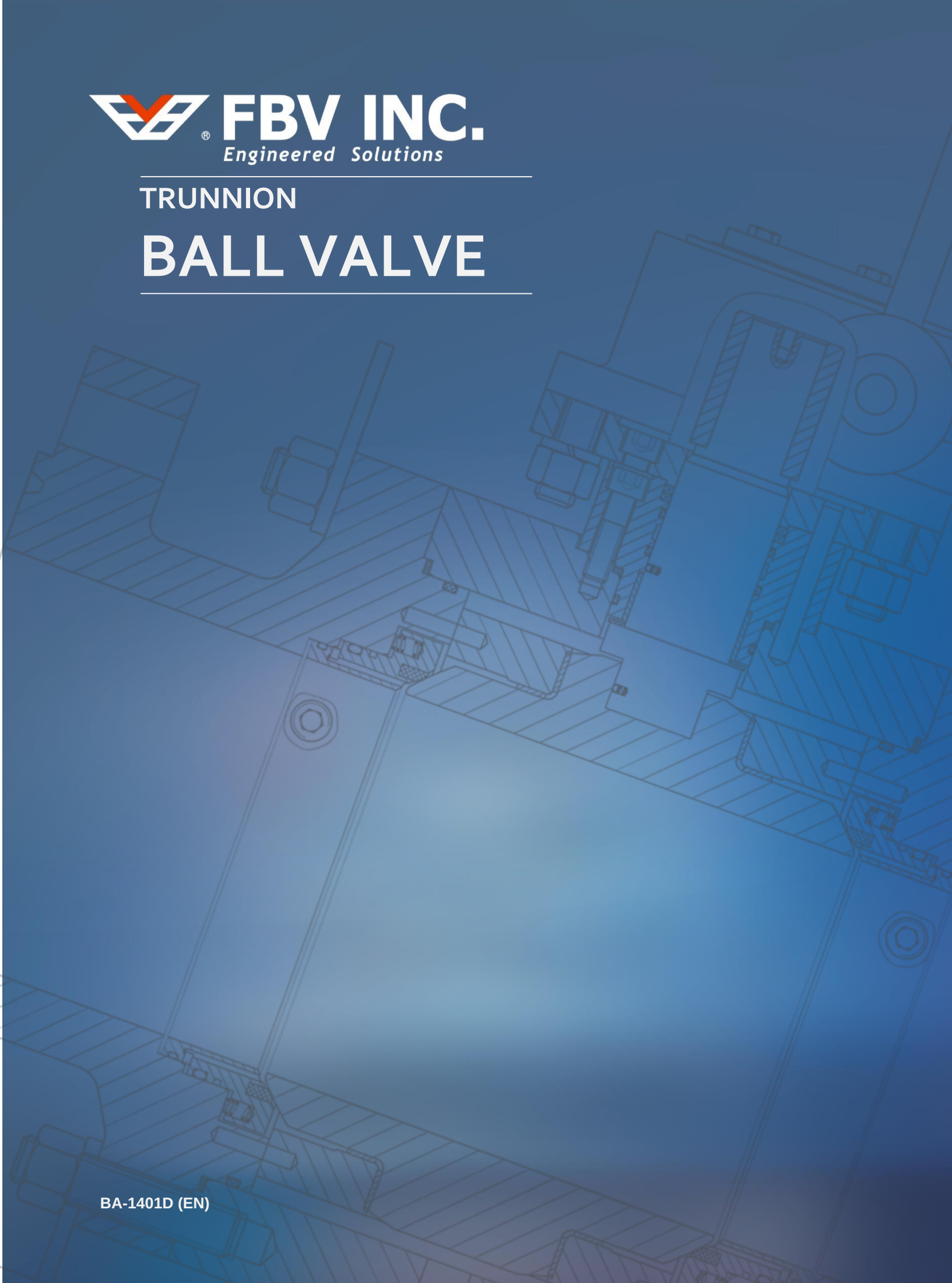

BA-1401D (EN)

ABOUT US

FBV Inc. is an ISO 9001 certified company specializing in manufacturing industrial valves including ball valves, gate valves, globe valves, check valves, plug valves and butterfly valves in carbon steel, stainless steel, duplex stainless and alloy materials. Our products conform to the latest industry standards in accordance to ANSI, ASME and API.

FBV today has over 600,000 square feet of manufacturing facilities. Through its conviction to provide only the finest quality products and services to match the need of our customers, FBV has now established itself as a serious player in the valve business.

FBV INC has sold worldwide in North America, Europe, South America, South Asia, Africa and the Middle East. We consider product quality and customer satisfaction as our highest priority. We look forward to new customer relationships by providing value, quality, customer service, honesty, integrity and the commitment to maintain product consistency with each and every order.

MISSIONSTATEMENT

We at FBV, Inc. commit to taking ACTION:

- Adopt the latest technology to take the product quality to the next level;
- Consistently provide on-time services to our customers;
- Train and develop talented people with strong work ethics to deliver effective performance;
- Improve and enhance engineering designs to ensure product performance;
- Optimize management systems and increase productivity;
- Never forget our customer and employee needs.

Engineered Solutions®

TRUNNION BALL VALVE

TABLE OF INDEX	*PAGE*

Introduction, *Features*	*3-4*
Scope of Products, *Split Body*	*5*
Scope of Products, *Welded Body*	*6*
Overview, *2-Piece Split Body*	*7*
Overview, *3-Piece Split Body*	*8*
Overview, *Welded Body*	*9*
Dimensions and Weights, *Class 150 (PN 20)*	*10-11*
Dimensions and Weights, *Class 300 (PN 50)*	*12-13*
Dimensions and Weights, *Class 600 (PN 100)*	*14-15*
Dimensions and Weights, *Class 900 (PN 150)*	*16*
Dimensions and Weights, *Class 1500 (PN 250)*	*17*
Dimensions and Weights, *Class 2500 (PN 420)*	*18*
Top Mounting Dimensions and Torque	*19-23*
Gear Operators, *Dimensions and Weights*	*24*
Seat and Seal Material, *Selection Guide*	*25*
Flow Coefficient, *Specification Table*	*26*
Valve Figure Number, *How To Order*	*27-28*

This page is intentionally left blank.

INTRODUCTION

A ball valve is a valve with a spherical disc, the part of the valve which controls the flow through it. The sphere has a hole, or port, through the middle so that when the port is in line with both ends of the valve, flow will occur. When the valve is closed, the hole is perpendicular to the ends of the valve, and flow is blocked.

A trunnion ball valve has additional mechanical anchoring of the ball at the top and the bottom, suitable for larger and higher pressure services. To ensure tight sealing at low pressure, high-tensile springs force the seats against the ball while at higher pressure, the medium pressure pushes upstream seat towards the ball.

EMERGENCY SEALS

For trunnion mounted ball valve size NPS 6 (DN 150) and above, it comes with provisions for sealant injection on both the stem and seat while for sizes NPS 5 (DN 125) and below on body cavity. In case of failed underperformed seals, a temporary emergency seal can be achieved by injecting sealants.

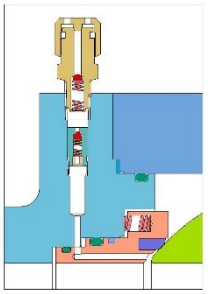

Seat Sealant Valve

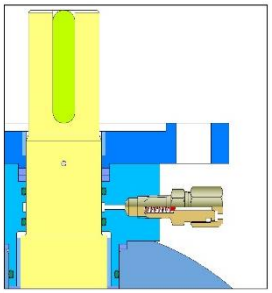

Stem Sealant Valve

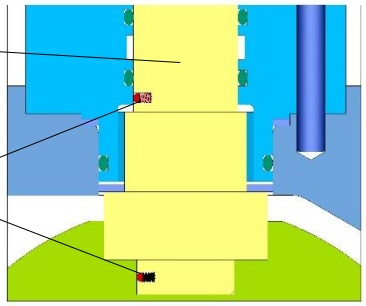

ANTI-STATIC

Because the ball and stem in a ball valve are suspended on non-metallic parts, i.e. the seat seal and stem seal, there is a possibility a static charge may build up on the stem-ball, a mechanical (antistatic metal spring and ball) is introduced in the design to maintain the metal-to-metal contact between the rotating ball/stem and the valve body which will ground any charges to the valve body.

BLOWOUT PROOF STEM

The valve stem is made with a shoulder at the bottom end. It's securely retained by the stuffing box, to avoid that the stem, under certain operating conditions, accidentally blows out. Other designs are available on request.

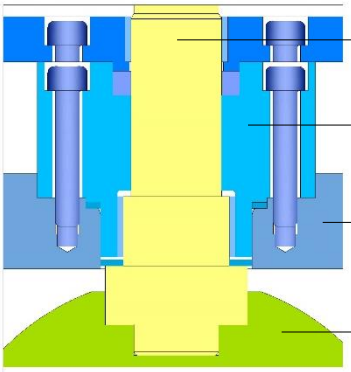

INTRODUCTION (CONT'D) *FEATURES*

SINGLE PISTON EFFECT

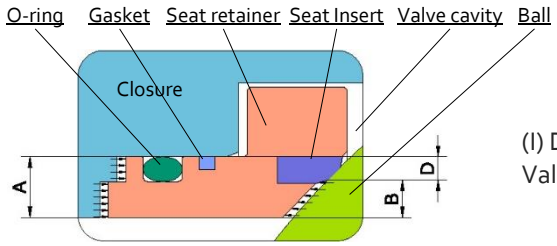

(I) Downstream Valve Seat

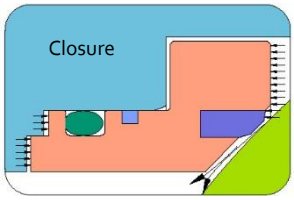

(II) Upstream Valve Seat

The difference in area (D) times the line pressure creates a "piston effect" force which pushes the seat against the ball surface resulting in a tight effect seal.

When the pressure in the valve cavity reaches a level that the total force from cavity acting on the seat is larger than the total force from upstream line pressure, the seat will be pushed away from the ball to relief the valve cavity pressure.

DOUBLE PISTON EFFECT

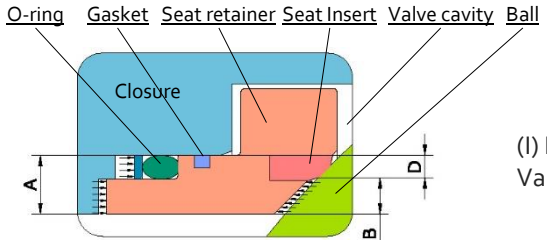

(I) Downstream Valve Seat

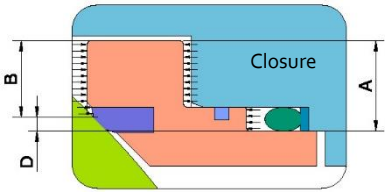

(II)Upstream Valve Seat

The different in area (D) times the line pressure creates a "piston effect" force which pushes the seat against the ball surface resulting in a tight seal.

The difference in the area (D) times the cavity pressure creates a "piston effect" force which pushes the seat against the ball surface resulting in a tight seal.

FIRE SAFE DESIGN

During a fire, non-metallic soft material will be burnt, subsequently seat leakage or external leakage may occur and cause the fire spread or contaminate the environment. FBV ball valves are fire tested in accordance with API 6FA or API 607, witnessed and certified by TUV SUD. If valve is not covered according to the standards, they are designed to be fire safe.

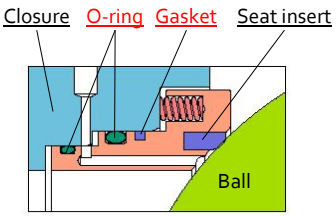

Seat before fire

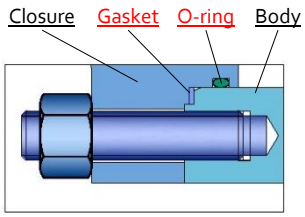

Body joint before fire

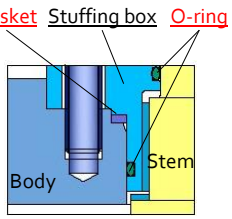

Gland before fire

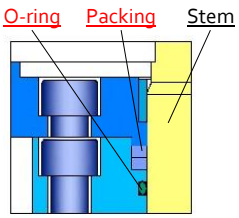

Stem before fire

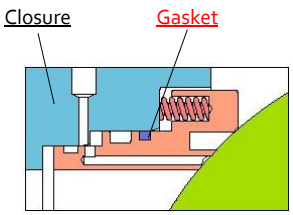

Seat after fire

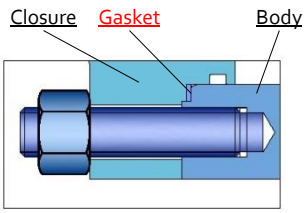

Body jointafter fire

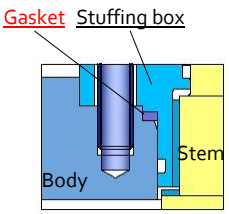

Glandafter fire

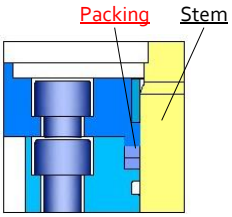

Stem after fire

Engineered Solutions

TRUNNION BALL VALVE

SCOPE OF PRODUCTS

SPLIT BODY

Legends:
A – Available in Casting and Forging
B – Available in Casting Only
C – Available Forging Only
D– Not Usually Required
E – Casting Not Recommended

Size in/mm	Class 150 PN 20	Class 300 PN 50	Class 600 PN 100	Class 900 PN 150	Class 1500 PN 250	Class 2500 PN 420
½ *15*						
¾ *20*						
1 *25*						
1 ½ *40*	A, E	A, E	A, E	A, E	A, E	C
2 *50*	A	A	A	A, E	A, E	C
2.5 *65*	A	A	A	A, E	A, E	C
3 *80*	A	A	A	A, E	A, E	C
4 *100*	A, D	A, D	A, D,E	A, D	A, D, E	C, D
6 *150*	A	A	A	A, E	A, E	C
8 *200*	A	A	A	A, E	A, E	C
10 *250*	A	A	A	A, E	A, E	C
12 *300*	A	A	A	A, E	A, E	C
14 *350*	A	A	A	A, E	A, E	C,D
16 *400*	A	A	A	A, E	A, E	C,D
18 *450*	A	A	A	A, E	A, E	C,D
20 *500*	A	A	A	A, E	A, E	C,D
22 *550*	A	A	A	A, E	A, E	C,D
24 *600*	A	A	A	A, E	A, E	C,D
26 *650*	A	A	A	A, E	A, E	C,D
28 *700*	A	A	A	A, E	A, E	C,D
30 *750*	A	A	A	A, E	A, E	C,D
32 *800*	A	A	A	A, E	A, E	C,D
34 *850*	A	A	A	A, E	A, E	C,D
36 *900*	A	A	A	A, E	A, E	C,D
38 *950*	A, E	A, E	A	A, E	A, E	C,D
40 *1000*	A, E	A, E	A	A, E	A, E	C,D
42 *1050*	A, E	A, E	A	A, E	A, E	C,D
48 *1200*	A, E	A, E	A	A, E	A, E	C,D
56 *1400*	A, E	A, E	A			

TRUNNION BALL VALVE

SCOPE OF PRODUCTS *WELDED BODY*

Legends:
A – Available in Casting and Forging
B – Available in Casting Only
C – Available Forging Only
D – Not Usually Required
E – Casting Not Recommended

Size in/mm	Class 150 PN 20	Class 300 PN 50	Class 600 PN 100	Class 900 PN 150	Class 1500 PN 250	Class 2500 PN 420
½ *15*						
¾ *20*						
1 *25*						
1 ½ *40*	C	C	C	C	C	C
2 *50*	C	C	C	C	C	C
2.5 *65*	C	C	C	C	C	C
3 *80*	C	C	C	C	C	C
4 *100*	C,D	C,D	C,D	C,D	C,D	C, D
6 *150*	C	C	C	C	C	C
8 *200*	C	C	C	C	C	C
10 *250*	C	C	C	C	C	C
12 *300*	C	C	C	C	C	C
14 *350*	C	C	C	C	C	C
16 *400*	C	C	C	C	C	C
18 *450*	C	C	C	C	C	C
20 *500*	C	C	C	C	C	C
22 *550*	C	C	C	C	C	
24 *600*	C	C	C	C	C	
26 *650*	C	C	C	C		
28 *700*	C	C	C	C		
30 *750*	C	C	C	C		
32 *800*	C	C	C			
34 *850*	C	C	C			
36 *900*	C	C	C			
38 *950*	C	C	C			
40 *1000*	C	C	C			
42 *1050*	C	C	C			
48 *1200*	C	C	C			
56 *1400*	C	C	C			

Engineered Solutions ®

TRUNNION BALL VALVE

OVERVIEW

2-PIECE SPLIT BODY

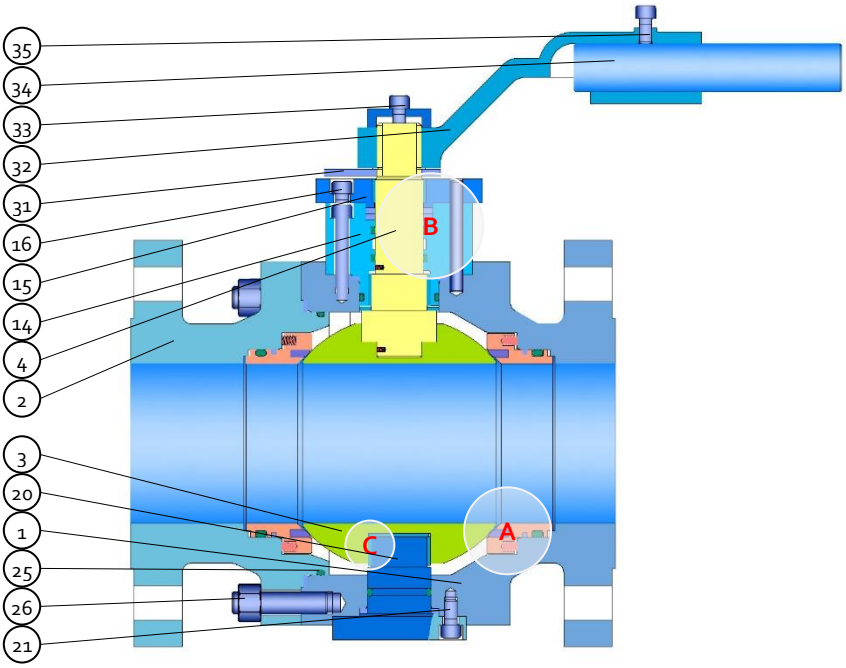

Forging Steel

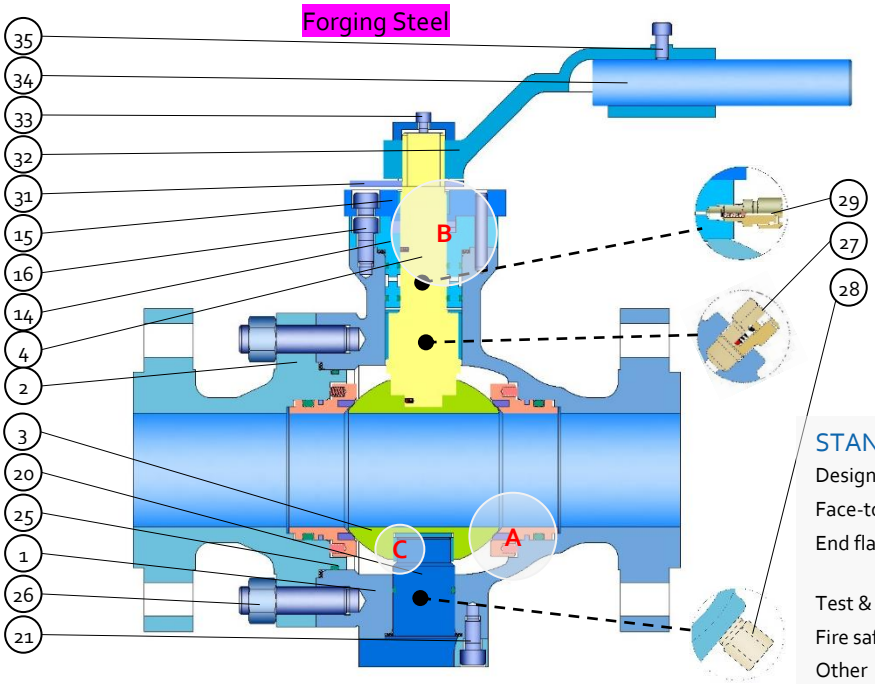

Casting Steel

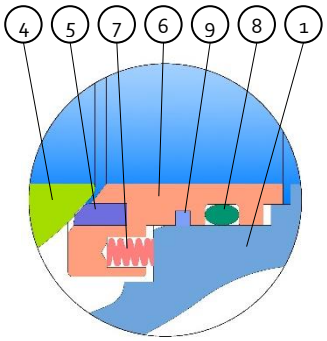

A

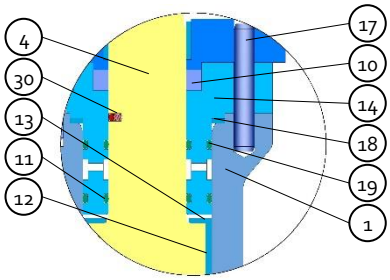

B

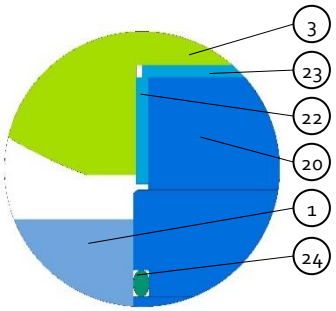

C

STANDARDS

Design& manufacture	API 6D, ISO 14313, ISO 17292
Face-to-face	API 6D, ASME B16.10
End flanges	ASME B16.5, ASME B16.47 MSS SP-44 (NPS 22 Only)
Test & inspection	API 6D, API 598
Fire safe	API 6FA, API 607
Other	NACE MR01-75, MR 0103 ISO 15848, API 622, API 624

PART LIST

1	Body	13	Thrust washer	25	Body seal
2	Closures	14	Stuffing box	26	Stud bolt & nut
3	Ball	15	Gland cover	27	Vent valve
4	Stem	16	Gland socket bolt	28	Drain plug
5	Seat insert	17	Gland pin	29	Stem sealant valve
6	Seat retainer	18	Gland seal	30	Antistatic assembly
7	Seat spring	19	Gland O-ring	31	Stopper
8	Seat O-ring	20	Trunnion	32	Lever
9	Seat seal	21	Trunnion socket bolt	33	Lever lock screw
10	Stem packing	22	Trunnion bushing	34	Extension pipe
11	Stem O-ring	23	Trunnion thrust washer	35	Pipe lock screw
12	Stem bushing	24	Trunnion O-ring		

TYPICAL MATERIALS

Body/Closures	A105, A182 F304, F304L, F316, F316L, F51, F53, A350 LF2, LF3, LF5, Monel, Inconel, Hastelloy (Forging) A216 WCB, A351 CF3, CF8, CF3M, CF8M, A995 4A, 5A, A352 LCB, LCC, LC2 (Casting)
Ball	CS+ENP, A182 F304, F304L, F316, F316L, F51, F53, CS+TCC, CS+Ni60
Seat retainer	CS+ENP, A182 F304, F304L, F316, F316L, F51, F53, CS+TCC, CS+Ni55
Seat insert	PTFE, RPTFE, Nylon, Devlon, PEEK
Stem	A182 F6a, F316, F51, A105+ENP, AISI 4140+ENP, 17-4PH
Packing	Graphite, PTFE, RPTFE
O-ring	Viton, NBR, HNBR, AFLAS

TRUNNION BALL VALVE

OVERVIEW

3-PIECE SPLIT BODY

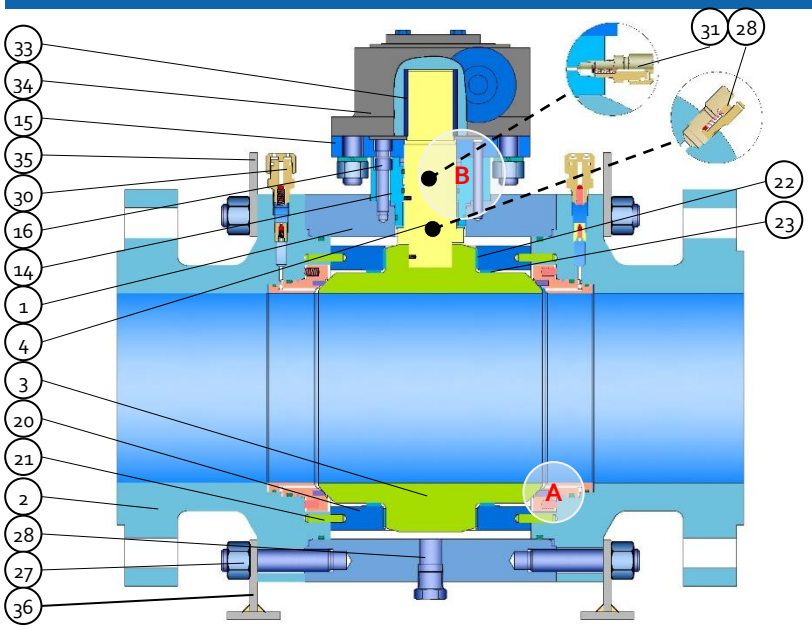

Forging Steel

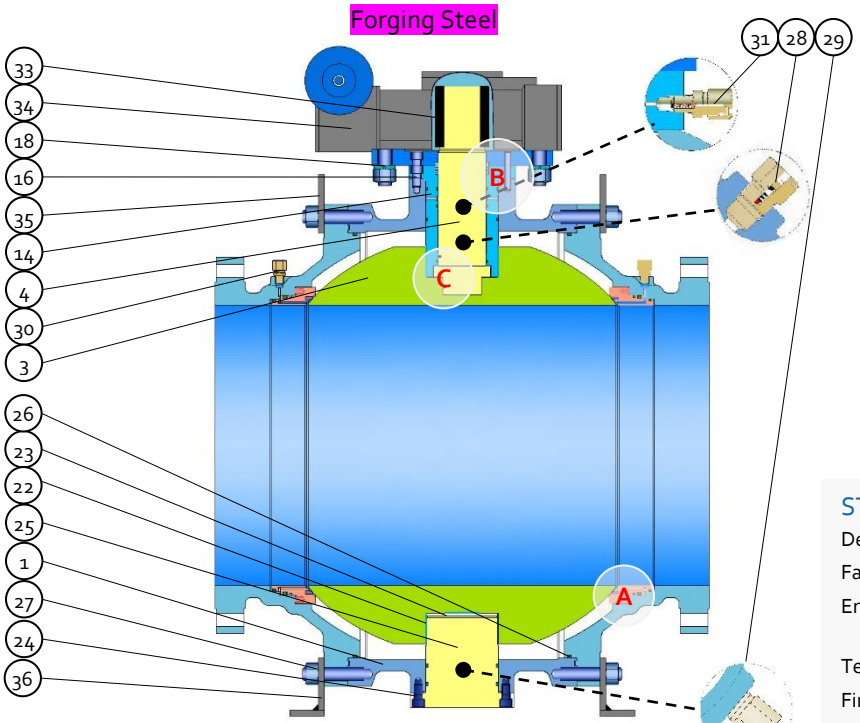

Casting Steel

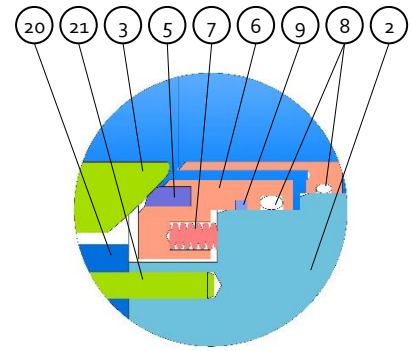

A

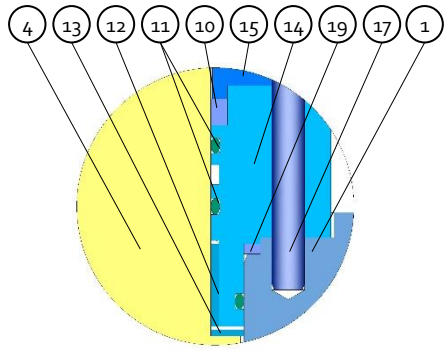

B

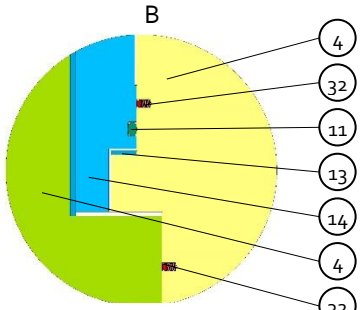

C

STANDARDS

Design& manufacture	API 6D, ISO 14313, ISO 17292
Face-to-face	API 6D, ASME B16.10
End flanges	ASME B16.5, ASME B16.47 MSS SP-44 (NPS 22 Only)
Test & inspection	API 6D, API 598
Fire safe	API 6FA, API 607
Other	NACE MR01-75, MR 0103 ISO 15848, API 622, API 624

PART LIST

1	Body	13	Thrust washer	25	Trunnion
2	Closures	14	Stuffing box	26	Body seal
3	Ball	15	Gland cover	27	Stud bolt & nut
4	Stem	16	Gland socket bolt	28	Vent valve
5	Seat insert	17	Gland pin	29	Drain plug
6	Seat retainer	18	Gland bolt & nut	30	Seat sealant valve
7	Seat spring	19	Gland seal	31	Stem sealant valve
8	Seat O-ring	20	Trunnion support	32	Antistatic assembly
9	Seat seal	21	Trunnion support pin	33	Drive key
10	Stem packing	22	Bushing	34	Gearbox assembly
11	Stem O-ring	23	Thrust washer	35	Lifting lug
12	Stem bushing	24	Trunnion socket bolt	36	Supporting leg

TYPICAL MATERIALS

Body/Closures	A105, A182 F304, F304L, F316, F316L, F51, F53, A350 LF2, LF3, LF5, Monel, Inconel, Hastelloy (Forging) A216 WCB, A351 CF3, CF8, CF3M, CF8M, A995 4A, 5A, A352 LCB, LCC, LC2 (Casting)
Ball	CS+ENP, A182 F304, F304L, F316, F316L, F51, F53, CS+TCC, CS+Ni60
Seat retainer	CS+ENP, A182 F304, F304L, F316, F316L, F51, F53, CS+TCC, CS+Ni55
Seat insert	PTFE, RPTFE, Nylon, Devlon, PEEK
Stem	A182 F6a, F316, F51, A105+ENP, AISI 4140+ENP, 17-4PH
Packing	Graphite, PTFE, RPTFE
O-ring	Viton, NBR, HNBR, AFLAS

Engineered Solutions

TRUNNION BALL VALVE

OVERVIEW *WELDED BODY*

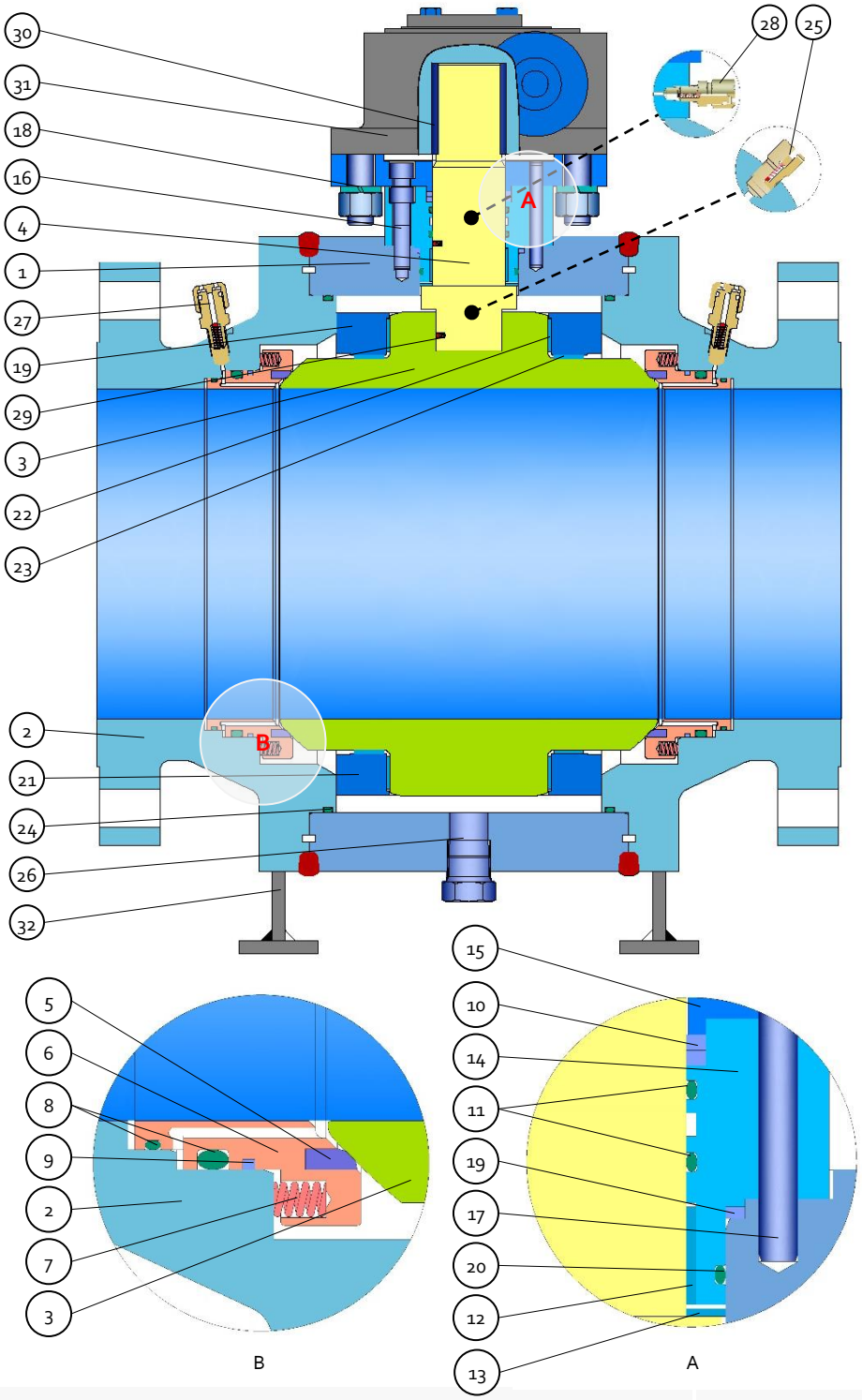

PART LIST

1. Body
2. Closures
3. Ball
4. Stem
5. Seat Insert
6. Seat retainer
7. Seat spring
8. Seat O-ring
9. Seat seal
10. Stem packing
11. Stem O-ring
12. Stem bushing
13. Thrust washer
14. Stuffing box
15. Gland cover
16. Gland socket bolt
17. Gland pin
18. Gland bolt & nut
19. Gland seal
20. Gland O-ring
21. Trunnion support
22. Trunnion support bushing
23. Trunnion support thrust washer
24. Body seal
25. Vent valve
26. Drain plug
27. Seat sealant valve
28. Stem sealant valve
29. Antistatic assembly
30. Drive key
31. Gearbox assembly
32. Supporting leg

TYPICAL MATERIALS

Body/Closures	A105, A182 F304, F304L, F316, F316L, F51, F53 A350 LF2, LF3, LF5, Monel, Inconel, Hastelloy (Forging only)
Ball	CS+ENP, A182 F304, F304L, F316, F316L, F51, F53 CS+TCC, CS+Ni60
Seat retainer	CS+ENP, A182 F304, F304L, F316, F316L, F51, F53 CS+TCC, CS+Ni55
Seat insert	PTFE, RPTFE, Nylon, Devlon, PEEK
Stem	A182 F6a, F316, F51, A105+ENP, AISI 4140+ENP, 17-4PH
Packing	Graphite, PTFE, RPTFE
O-ring	Viton, NBR, HNBR, AFLAS

STANDARDS

Design& manufacture	API 6D, ISO 14313, ISO 17292
Face-to-face	API 6D, ASME B16.10
End flanges	ASME B16.5, ASME B16.47 MSS SP-44 (NPS 22 Only)
Test & inspection	API 6D, API 598
Fire safe	API 6FA, API 607
Other	NACE MR01-75, MR 0103 ISO 15848, API 622, API 624

DIMENSIONS AND WEIGHTS

ASME CLASS 150 (PN 20)

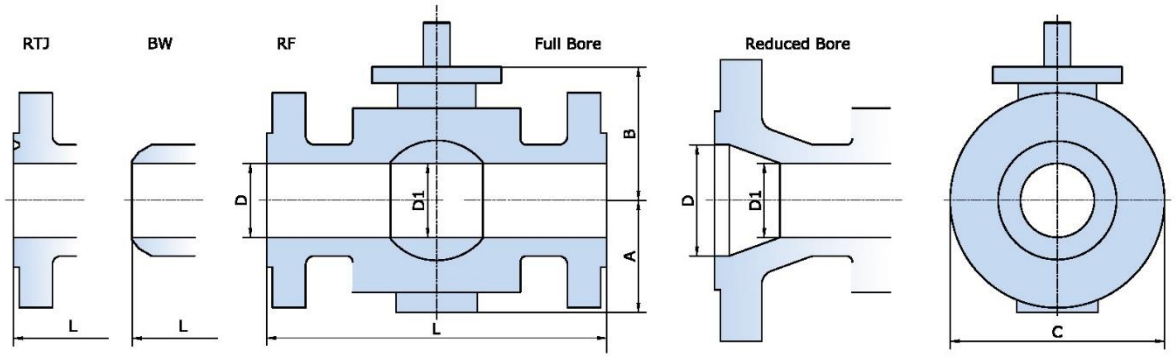

ASME CLASS 150 (PN 20) FULL BORE

Size *in/mm*	D	D1	L			Casting			Forging			Weight	
			RF	RTJ	BW	A	B	C	A	B	C	RF/RTJ *(lb/kg)*	BW *(lb/kg)*
2	1.93	1.93	7	7.5	8.5	3.4	5.3	5.9	3.1	4.6	5.9	40	35
50	*49*	*49*	*178*	*191*	*216*	*86*	*135*	*150*	*79*	*117*	*150*	*18*	*16*
2 ½	2.44	2.44	7.5	8	9.5	3.9	5.9	7.3	3.6	5.7	7.1	53	48
65	*62*	*62*	*191*	*203*	*241*	*100*	*150*	*185*	*92*	*145*	*180*	*24*	*22*
3	2.91	2.91	8	8.5	11	4.9	6.3	7.8	4	5.6	7.7	73	66
80	*74*	*74*	*203*	*216*	*283*	*125*	*161*	*198*	*102*	*141*	*195*	*33*	*30*
4	3.94	3.94	9	9.5	12	5.2	7.5	9	4.8	6.7	9	110	99
100	*100*	*100*	*229*	*242*	*305*	*132*	*190*	*230*	*123*	*170*	*230*	*50*	*45*
5	5	5	14	14.53	14	6.1	8.1	11.2	5.9	7.9	11	238	224
125	*127*	*127*	*356*	*369*	*356*	*155*	*205*	*285*	*150*	*200*	*280*	*108*	*102*
6	5.91	5.91	15.5	16	18	7.2	9.2	12.6	6.6	8.7	12.1	319	286
150	*150*	*150*	*394*	*407*	*457*	*184*	*233*	*320*	*168*	*222*	*308*	*145*	*130*
8	7.91	7.91	18	18.5	20.5	9	10	15.7	9	10	15.3	562	368
200	*201*	*201*	*457*	*470*	*521*	*228*	*253*	*398*	*230*	*255*	*388*	*255*	*235*
10	9.92	9.92	21	21.5	22	10.6	11.4	19.1	11.2	11.8	18.7	859	811
250	*252*	*252*	*533*	*546*	*559*	*268*	*290*	*485*	*285*	*300*	*475*	*390*	*368*
12	11.94	11.94	24	24.5	25	12.9	15.6	22.2	13.4	14.4	21.4	1,342	1232
300	*303*	*303*	*610*	*623*	*635*	*327*	*395*	*565*	*340*	*340*	*543*	*610*	*560*
14	13.15	13.15	27	27.5	30	14.8	15.6	14	14.2	15	23.5	1718	1652
350	*334*	*334*	*686*	*699*	*762*	*375*	*395*	*610*	*360*	*381*	*598*	*780*	*750*
16	15.16	15.16	30	30.5	33	16	17.8	27.9	15.7	16.5	26.7	2640	2420
400	*385*	*385*	*762*	*775*	*838*	*405*	*452*	*708*	*400*	*419*	*678*	*1200*	*1100*
18	17.17	17.17	34	34.5	36	18.3	18.5	30.1	18.1	18.5	29.9	3304	3124
450	*436*	*436*	*864*	*877*	*914*	*465*	*470*	*765*	*460*	*470*	*760*	*1500*	*1420*
20	19.17	19.17	36	36.5	39	21.7	21.7	34.3	19.3	19.9	33.1	4207	4075
500	*487*	*487*	*914*	*927*	*991*	*550*	*550*	*870*	*490*	*505*	*840*	*1910*	*1850*
22	21.19	21.19	39	39.5	43	19.1	19.1	37	18.9	21.5	36.8	4928	4774
550	*538*	*538*	*991*	*1003*	*1092*	*485*	*550*	*940*	*480*	*545*	*935*	*2240*	*2170*
24	23.19	23.19	42	42.5	46	24	24.1	40.4	23.6	23.9	39.8	6820	6006
600	*589*	*589*	*1067*	*1080*	*1143*	*610*	*612*	*1026*	*600*	*607*	*1010*	*3100*	*2730*
26	24.94	24.94	45	(1)	49	24.8	26	43.7	24.5	25.6	42.5	7048	6894
650	*633*	*633*	*1143*		*1245*	*630*	*660*	*1110*	*623*	*651*	*1080*	*3200*	*3130*
28	26.94	26.94	49	(1)	53	27	28	46.3	26.8	27.2	45.6	7963	7963
700	*684*	*684*	*1245*		*1346*	*685*	*700*	*1175*	*680*	*690*	*1157*	*3615*	*3540*
30	28.94	28.94	51	(1)	55	28	30.6	49.8	29	29	48.8	11814	10780
750	*735*	*735*	*1295*		*1397*	*710*	*777*	*1265*	*737*	*737*	*1240*	*5370*	*4900*
32	30.69	30.69	54	(1)	60	30.3	30.7	45.1	30.1	30.5	52.6	13310	12716
800	*779*	*779*	*1372*		*1524*	*770*	*780*	*1145*	*765*	*775*	*1335*	*6050*	*5780*
34	32.69	32.69	58	(1)	64	31.3	30.9	45.3	30.7	30.3	44.5	15180	14146
850	*830*	*830*	*1473*		*1626*	*795*	*785*	*1150*	*780*	*770*	*1130*	*6900*	*6430*
36	34.41	34.41	60	(1)	68	35.6	34.4	58.3	33.5	33.5	57.8	18920	16720
900	*874*	*874*	*1524*		*1727*	*905*	*875*	*1480*	*850*	*852*	*1468*	*8600*	*7600*
40	38.44	38.44	70.87	(1)	70.87	37	37	66.9	36.6	36.6	64.2	24200	21340
1000	*976*	*976*	*1800*		*1800*	*940*	*940*	*1700*	*930*	*930*	*1630*	*11000*	*9700*
42	40.19	40.19	74.8	(1)	74.8	38.4	38.4	66.9	37.4	37.94	66.5	31900	24816
1050	*1010*	*1010*	*1900*		*1900*	*975*	*975*	*1700*	*950*	*950*	*1690*	*14500*	*11280*
48	45.94	45.94	82.68	(1)	82.68	42.7	45.3	76.4	42.3	43.3	76	39600	35420
1200	*1166*	*1166*	*2100*		*2100*	*1085*	*1150*	*1940*	*1075*	*1100*	*1930*	*18000*	*16100*
56	53.56	53.56	94.49	(1)	94.49	50.4	51.6	90.2	50	51.6	89.6	61600	55660
1400	*1360*	*1360*	*2400*		*2400*	*1280*	*1310*	*2290*	*1270*	*1310*	*2275*	*28000*	*25300*

(1) Contact our sales representative for more information.

Engineered Solutions

TRUNNION BALL VALVE

DIMENSIONS AND WEIGHTS

ASME CLASS 150 (PN 20)

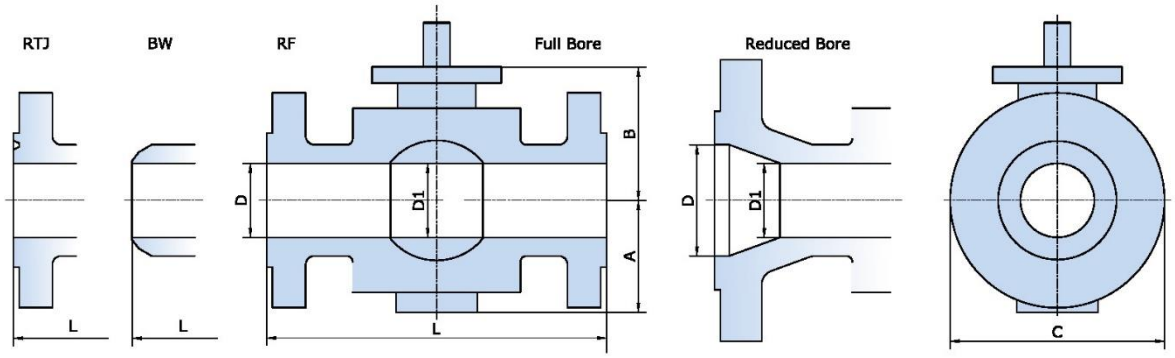

ASME CLASS 150 (PN 20) REDUCED BORE

Size *in/mm*	D	D1	L			Casting			Forging			Weight	
			RF	RTJ	BW	A	B	C	A	B	C	RF/RTJ *(lb/kg)*	BW *(lb/kg)*
2x1 ½	1.93	1.5	7	7.5	8.5	3.3	4.9	5.9	3	4.3	5.9	33	26
50x40	*49*	*38*	*178*	*191*	*216*	*85*	*125*	*150*	*75*	*110*	*150*	*15*	*12*
2 ½x2	2.44	1.93	7.5	8	9.5	3.3	5.3	7.1	3.1	4.6	7.1	49	42
65x50	*62*	*49*	*190*	*203*	*241*	*86*	*135*	*180*	*79*	*117*	*180*	*22*	*19*
3x2	2.94	1.93	8	8.5	11.13	3.3	5.3	7.5	3.1	4.6	7.5	68	48
80x50	*74*	*49*	*203*	*216*	*283*	*86*	*135*	*190*	*79*	*117*	*190*	*31*	*22*
4x3	3.94	2.94	9	9.5	12	4.9	9.1	7.8	4	5.5	9.1	97	81
100x80	*100*	*74*	*229*	*241*	*305*	*125*	*230*	*198*	*102*	*141*	*230*	*44*	*37*
6x4	5.94	3.94	15.5	16	18	5.5	7.5	11	4.8	6.7	11	264	209
150x100	*150*	*100*	*394*	*406*	*457*	*140*	*190*	*280*	*123*	*170*	*280*	*120*	*95*
8x6	7.94	5.94	18	18.5	20.5	7.2	9.2	13.6	6.8	8.7	13.6	463	414
200x150	*201*	*150*	*457*	*470*	*521*	*184*	*233*	*345*	*172.5*	*222*	*345*	*210*	*188*
10x8	9.94	7.94	21	21.5	22	9	10	1.6	9.1	10	15.9	728	671
250x200	*252*	*201*	*533*	*546*	*559*	*228*	*253*	*405*	*230*	*255*	*405*	*330*	*305*
12x10	11.94	9.94	24	24.5	25	10.6	11.4	19.1	11.2	11.8	19.1	1123	925
300x250	*303*	*252*	*610*	*622*	*635*	*268*	*290*	*485*	*285*	*300*	*485*	*510*	*420*
14x10	13.19	9.94	27	27.5	30	10.6	11.4	21	11.2	11.8	21	1542	1211
350x250	*334*	*252*	*686*	*699*	*762*	*268*	*290*	*535*	*285*	*300*	*535*	*700*	*550*
16x12	15.19	11.94	30	30.5	33	12.9	15.6	22.2	13.4	13.4	23.4	2004	1674
400x300	*385*	*303*	*762*	*775*	*838*	*327*	*395*	*565*	*340*	*340*	*595*	*910*	*760*
18x14	17.19	13.19	34	34.5	36	14.8	15.6	25	14.2	15	25	2974	2600
450x350	*436*	*334*	*864*	*877*	*314*	*375*	*395*	*635*	*360*	*381*	*635*	*1350*	*1180*
20x16	19.19	15.19	36	36.5	39	15.9	17.8	27.9	15.7	21.7	27.6	3722	3304
500x400	*487*	*385*	*914*	*927*	*991*	*405*	*452*	*708*	*400*	*419*	*700*	*1690*	*1500*
24x20	23.19	19.19	42	42.5	45	21.7	21.7	34.3	19.3	19.9	33.1	5352	4780
600x500	*589*	*487*	*1067*	*1080*	*1143*	*550*	*550*	*870*	*490*	*505*	*840*	*2430*	*2170*
30x24	28.94	23.19	51	(1)	55	24	24.1	40.4	23.6	23.9	39.8	9097	8150
750x600	*735*	*589*	*1295*		*1397*	*610*	*612*	*1026*	*600*	*607*	*1010*	*4130*	*3700*
36x30	34.44	28.94	60	(1)	68	28	30.6	49.8	29	29	48.8	16300	14978
900x750	*874*	*735*	*1524*		*1727*	*710*	*777*	*1265*	*737*	*737*	*1240*	*74100*	*6800*

(1) Contact our sales representative for more information.

DIMENSIONS AND WEIGHTS

ASME CLASS 300 (PN 50)

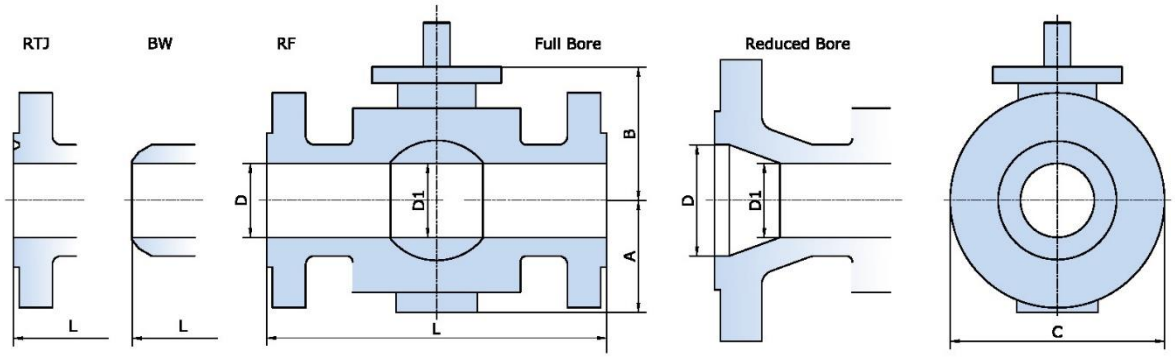

ASME CLASS 300 (PN 50) FULL BORE

Size *in/mm*	D	D1	L			Casting			Forging			Weight	
			RF	RTJ	BW	A	B	C	A	B	C	RF/RTJ *(lb/kg)*	BW *(lb/kg)*
2	1.93	1.93	8.5	9.13	8.5	3.6	5.3	6.5	3.3	4.6	6.5	62	51
50	*49*	*49*	*216*	*232*	*216*	*91*	*135*	*165*	*83*	*117*	*165*	*28*	*23*
2 ½	2.44	2.44	9.5	10.12	9.5	3.7	5.9	7.3	3.6	5.7	7.1	77	73
65	*62*	*62*	*241*	*257*	*241*	*95*	*150*	*185*	*92*	*145*	*180*	*35*	*33*
3	2.94	2.94	11.13	11.75	11.13	5	6.3	8.3	4.1	5.6	8.3	95	88
80	*74*	*74*	*282*	*298*	*283*	*126*	*161*	*210*	*105*	*141*	*210*	*43*	*40*
4	3.94	3.94	12	12.63	12	5.2	7.5	10	5	6.7	10	152	143
100	*100*	*100*	*305*	*321*	*305*	*132*	*190*	*255*	*128*	*170*	*255*	*69*	*65*
5	5	5	15.75	16.26	15.75	6.3	8.3	11.6	6.1	8	11.2	328	304
125	*125*	*125*	*400*	*413*	*400*	*160*	*210*	*295*	*155*	*202*	*285*	*149*	*138*
6	5.94	5.94	15.88	16.5	18	7.4	9.2	13	6.6	8.7	12.6	396	308
150	*150*	*150*	*403*	*419*	*457*	*189*	*233*	*330*	*168*	*222*	*320*	*180*	*140*
8	7.91	7.91	19.75	20.38	20.5	9	10	15.7	9.3	10	15.4	647	539
200	*201*	*201*	*502*	*518*	*521*	*228*	*253*	*398*	*235*	*255*	*392*	*294*	*245*
10	9.92	9.92	22.38	23	22	10.6	11.4	10.1	11.4	12	19.1	976	903
250	*252*	*252*	*568*	*584*	*559*	*268*	*290*	*485*	*290*	*305*	*485*	*443*	*410*
12	11.94	11.94	25.5	28.13	25.5	12.9	15.6	23.2	13.4	13.4	21.8	1542	1432
300	*303*	*303*	*648*	*664*	*635*	*327*	*395*	*590*	*340*	*340*	*554*	*700*	*650*
14	13.19	13.19	30	30.62	30	15.2	15.7	24.8	14.5	15	23.9	2042	1949
350	*334*	*334*	*762*	*778*	*762*	*385*	*400*	*630*	*368*	*384*	*606*	*927*	*885*
16	15.19	15.19	33	33.63	33	15.9	17.8	28.2	16.5	16.5	27.1	2863	2731
400	*385*	*385*	*838*	*854*	*838*	*405*	*452*	*716*	*420*	*419*	*689*	*1300*	*1240*
18	17.19	17.19	36	36.63	36	18.9	19.3	31.5	18.5	18.9	30.7	3744	3480
450	*436*	*436*	*914*	*930*	*914*	*480*	*490*	*800*	*470*	*480*	*780*	*1700*	*1580*
20	19.17	19.17	39	39.75	39	21.7	21.7	34.3	19.5	19.9	33.5	5066	4405
500	*487*	*487*	*991*	*1010*	*991*	*550*	*550*	*870*	*495*	*505*	*850*	*23000*	*2000*
22	21.19	21.19	43	43.88	43	20.3	21.7	37.8	20.1	21.5	37.2	5390	4840
550	*538*	*538*	*1092*	*1114*	*1092*	*515*	*550*	*960*	*510*	*545*	*945*	*2450*	*2200*
24	23.19	23.19	45	45.888	45	24	24.8	40.6	24.8	23.9	40.9	8436	7600
600	*589*	*589*	*1143*	*1165*	*1143*	*610*	*630*	*1030*	*630*	*607*	*1038*	*3830*	*3450*
26	24.94	24.94	49	50	49	28.4	26	43.1	24.5	25.6	42.7	9295	8480
650	*633*	*633*	*1245*	*1270*	*1245*	*630*	*660*	*1095*	*623*	*651*	*1085*	*4220*	*3850*
28	26.94	26.94	53	54	53	27.6	28	46.9	27.2	27.6	46.3	10604	9372
700	*684*	*684*	*1346*	*1372*	*1346*	*700*	*710*	*1190*	*690*	*700*	*1175*	*4820*	*4260*
30	28.94	28.94	55	56	55	28	30.6	49.8	29.4	29.4	49.8	12320	11330
750	*735*	*735*	*1397*	*1422*	*1397*	*710*	*777*	*1265*	*747*	*747*	*1266*	*5600*	*5150*
32	30.69	30.69	60	61.13	60	30.7	31.1	53.1	30.3	30.7	53	15088	13767
800	*779*	*779*	*1524*	*1552*	*1524*	*780*	*790*	*1350*	*770*	*780*	*1345*	*6850*	*6250*
34	32.69	32.69	64	65.1	64	31.9	30.5	47.8	31.9	30.5	47.8	15510	14190
850	*830*	*830*	*1626*	*1654*	*1626*	*810*	*775*	*1215*	*810*	*775*	*1215*	*7050*	*6450*
36	34.41	34.41	68	69.13	68	35.6	34.4	58.3	34	34	58.7	19800	18480
900	*874*	*874*	*1727*	*1756*	*1727*	*905*	*875*	*1480*	*864*	*864*	*1492*	*9000*	*8400*
40	38.44	38.44	76.77	(1)	76.77	37	37	65	36.6	36.6	64.6	24200	22660
1000	*976*	*976*	*1950*		*1950*	*940*	*940*	*1650*	*930*	*930*	*1640*	*11000*	*10300*
42	40.19	40.19	82.68	(1)	82.68	38.2	38.2	66.9	37.8	37..8	66.5	31900	29920
1050	*1020*	*1020*	*2100*		*2100*	*970*	*970*	*1700*	*960*	*960*	*1690*	*14500*	*13600*
48	45.94	45.94	85.43	(1)	85.43	44.1	44.1	77.4	43.3	43.3	76.6	39600	37620
1200	*1166*	*1166*	*2170*		*1270*	*1120*	*1120*	*1965*	*1100*	*1100*	*1945*	*18000*	*17100*
56	53.56	53.56	98.43	(1)	98.43	50.4	53.1	90.4	50	52.2	89.8	60060	56760
1400	*1360*	*1360*	*2500*		*2500*	*1280*	*1350*	*2295*	*1270*	*1325*	*2282*	*27300*	*25800*

(1) Contact our sales representative for more information.

DIMENSIONS AND WEIGHTS

ASME CLASS 300 (PN 50)

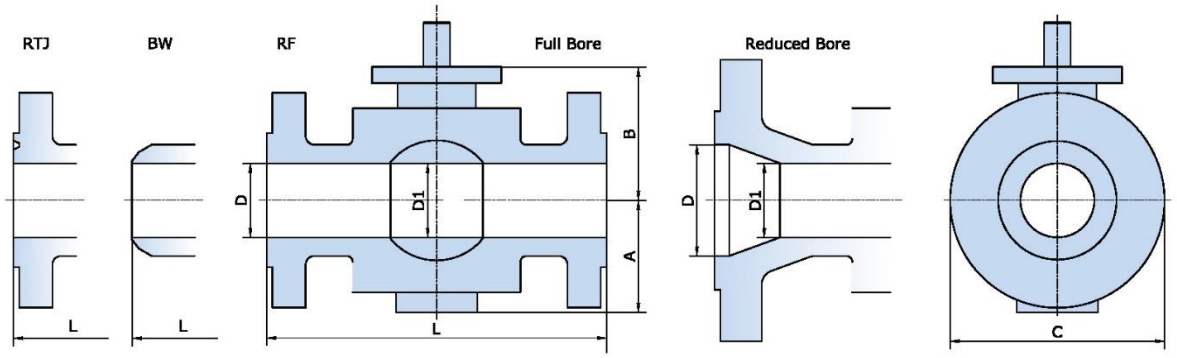

ASME CLASS 300 (PN 50) REDUCED BORE

Size *in/mm*	D	D1	L			Casting			Forging			Weight	
			RF	RTJ	BW	A	B	C	A	B	C	RF/RTJ *(lb/kg)*	BW *(lb/kg)*
2x1 ½	1.93	1.5	8.5	9.11	8.5	3.5	5.1	6.5	3.3	4.3	6.5	48	41
50x40	*49*	*38*	*216*	*232*	*216*	*90*	*130*	*165*	*83*	*110*	*165*	*22*	*18.5*
2 ½x2	2.44	1.93	9.5	10.13	9.5	3.6	5.3	6.5	3.3	4.6	7.5	62	55
65x50	*62*	*49*	*241*	*257*	*241*	*91*	*135*	*165*	*83*	*117*	*190*	*28*	*25*
3x2	2.94	1.93	11.13	11.75	11.13	3.6	5.3	8.3	3.3	4.6	8.3	81	75
80x50	*74*	*49*	*283*	*298*	*283*	*91*	*135*	*210*	*83*	*117*	*210*	*37*	*34*
4x3	3.94	2.94	12	12.63	12	5	6.3	10	5	5.6	10	119	90
100x80	*100*	*74*	*305*	*321*	*305*	*128*	*161*	*255*	*128*	*141*	*255*	*54*	*41*
6x4	5.94	3.94	15.88	16.5	18	6.3	7.5	12.6	6.3	6.7	12.6	242	187
150x100	*150*	*100*	*403*	*419*	*457*	*160*	*190*	*320*	*160*	*170*	*320*	*110*	*85*
8x6	7.94	5.94	19.75	20.38	20.5	7.5	9.2	15	7.5	8.7	15	495	451
200x150	*201*	*150*	*518*	*518*	*521*	*190*	*233*	*380*	*190*	*222*	*380*	*225*	*205*
10x8	9.94	7.94	22.38	23	22	9	10	17.5	9.3	10	17.5	803	748
250x200	*252*	*201*	*568*	*584*	*559*	*228*	*253*	*445*	*235*	*255*	*445*	*365*	*340*
12x10	11.94	9.94	25.5	26.13	25	10.6	11.4	20.5	11.4	12	20.5	1320	1239
300x250	*303*	*252*	*648*	*664*	*635*	*268*	*290*	*520*	*290*	*305*	*520*	*600*	*563*
14x10	13.19	9.94	30	30.63	30	10.6	114	23	11.4	12	23	1762	1432
350x250	*334*	*252*	*762*	*778*	*762*	*268*	*290*	*585*	*290*	*305*	*585*	*800*	*650*
16x12	15.19	11.94	33	33.63	33	12.9	15.6	23.2	13.4	13.4	21.8	2445	2269
400x300	*385*	*334*	*838*	*854*	*838*	*327*	*395*	*590*	*340*	*340*	*554*	*1110*	*1030*
18x14	17.19	13.19	36	36.62	36	15.2	15.7	28	14.5	15.1	28	3300	3102
450x350	*436*	*334*	*914*	*930*	*914*	*385*	*400*	*710*	*368*	*384*	*710*	*1500*	*1410*
20x16	19.19	15.19	39	49.75	39	16	17.8	28.2	16.5	16.5	27.1	4626	4185
500x400	*487*	*385*	*991*	*1010*	*991*	*405*	*452*	*716*	*420*	*419*	*689*	*2100*	*1900*
24x20	23.19	19.19	45	45.88	45	21.7	21.7	36	19.5	19.9	36	6057	5617
600x500	*589*	*487*	*1143*	*1165*	*1143*	*550*	*550*	*915*	*495*	*505*	*915*	*2750*	*2550*
30x24	28.94	23.19	55	56	55	24	24.8	42.9	24.85	23.9	42.9	9350	8492
750x600	*735*	*589*	*1397*	*1422*	*1397*	*610*	*630*	*1090*	*630*	*607*	*1090*	*4250*	*3860*
36x30	34.44	28.94	55	56	55	28	30.6	50	29.4	29.4	50	16740	14450
900x750	*874*	*735*	*1397*	*1422*	*1397*	*710*	*777*	*1270*	*747*	*747*	*1270*	*7600*	*6560*

(1) Contact our sales representative for more information.

DIMENSIONS AND WEIGHTS

ASME CLASS 600 (PN 100)

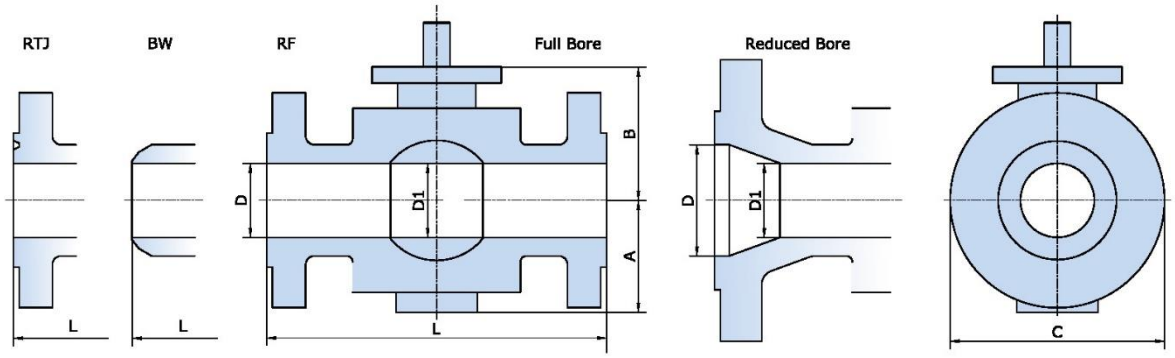

ASME CLASS 600 (PN 100) FULL BORE

Size *in/mm*	D	D1	L			Casting			Forging			Weight	
			RF	RTJ	BW	A	B	C	A	B	C	RF/RTJ *(lb/kg)*	BW *(lb/kg)*
2	1.93	1.93	11.5	11.63	11.5	3.7	5.7	6.5	3.3	5	6.5	62	57
50	*49*	*49*	*292*	*295*	*292*	*95*	*145*	*165*	*83*	*126*	*165*	*28*	*26*
2 ½	2.44	2.44	13	13.13	13	3.9	6.3	7.7	3.7	5.9	7.4	119	106
65	*62*	*62*	*330*	*333*	*330*	*100*	*160*	*195*	*95*	*150*	*188*	*54*	*48*
3	2.94	2.94	14	14.13	14	5	7.2	8.3	4.6	6.1	8.3	165	159
80	*74*	*74*	*356*	*359*	*356*	*128*	*184*	*210*	*117*	*155*	*210*	*75*	*72*
4	3.94	3.94	17	17.13	17	5.8	8.2	11.6	5.4	7	10.8	242	209
100	*100*	*100*	*432*	*435*	*432*	*148*	*209*	*295*	*138*	*177*	*275*	*110*	*95*
5	5	5	20	2012	20	6.7	8.2	13.4	6.5	8	13	407	352
125	*127*	*125*	*508*	*511*	*508*	*170*	*208*	*340*	*165*	*202*	*330*	*185*	*160*
6	5.94	5.94	22	22.13	22	7.7	9.8	14	7	9	14	551	511
150	*150*	*150*	*559*	*562*	*559*	*195*	*250*	*355*	*178*	*228*	*355*	*250*	*232*
8	7.91	7.91	26	26.13	26	9.6	11.1	16.5	9.6	10.5	16.5	914	727
200	*201*	*201*	*660*	*663*	*660*	*245*	*283*	*420*	*245*	*267*	*420*	*415*	*330*
10	9.92	9.92	31	31.13	31	11.4	12.6	20	11.9	12.3	20	1652	1564
250	*252*	*252*	*787*	*790*	*787*	*290*	*320*	*510*	*302*	*312*	*510*	*750*	*710*
12	11.94	11.94	33	33.13	33	14.2	15.3	22.8	13.8	14.5	22.6	2024	1808
300	*303*	*303*	*838*	*841*	*635*	*360*	*390*	*580*	*350*	*368*	*573*	*919*	*820*
14	13.19	13.19	35	35.12	35	15.6	16.1	25	15	15.6	24.8	2863	2445
350	*334*	*334*	*889*	*891*	*889*	*395*	*410*	*635*	*380*	*396*	*630*	*1300*	*1110*
16	15.19	15.19	39	39.13	39	16.7	17.2	28.3	17.3	17.5	16.7	3722	33304
400	*385*	*385*	*991*	*994*	*991*	*425*	*436*	*720*	*440*	*444*	*423*	*1690*	*1500*
18	17.19	17.19	43	43.13	430	19.3	20.3	32.3	18.9	20	31.9	5176	4670
450	*436*	*435*	*1092*	*1095*	*1092*	*490*	*515*	*820*	*480*	*510*	*810*	*2350*	*2120*
20	19.17	19.17	47	47.25	47	22.6	22.7	36.2	20.6	20.7	34.4	6500	6013
500	*487*	*487*	*1194*	*1200*	*1194*	*575*	*576*	*920*	*522*	*525*	*875*	*2950*	*2730*
22	21.19	21.19	51	51.38	51	20.5	22	37.8	20.3	26.7	37.4	6938	6432
550	*538*	*538*	*1295*	*1305*	*1295*	*520*	*560*	*960*	*515*	*550*	*950*	*3150*	*2920*
24	23.19	23.19	55	55.38	55	23.8	25.2	41	24.4	25.2	41.3	10573	9692
600	*589*	*589*	*1397*	*1407*	*1397*	*605*	*640*	*1043*	*619*	*641*	*1050*	*4800*	*4400*
26	24.94	24.94	57	57.5	57	25.6	26.4	43.9	25.5	26.2	43.3	11718	10683
650	*633*	*633*	*1448*	*1461*	*1448*	*650*	*670*	*1115*	*640*	*665*	*1100*	*5320*	*4850*
28	26.94	26.94	61	61.5	61	26.8	23.3	48	26.6	28.1	47.6	17400	16410
700	*684*	*684*	*1549*	*1562*	*1594*	*680*	*720*	*1220*	*675*	*715*	*1210*	*7900*	*7450*
30	28.94	28.94	65	65.5	65	29.9	30.6	51.8	29.1	30.6	51	19600	18612
750	*735*	*735*	*1651*	*1664*	*1651*	*760*	*777*	*1315*	*740*	*776*	*1295*	*8900*	*8450*
32	30.69	30.69	70	70	70.63	31.1	31.5	55.5	30.9	31.3	53.9	20240	18260
800	*779*	*779*	*1778*	*1778*	*1794*	*790*	*790*	*1410*	*785*	*794*	*1370*	*9200*	*8300*
34	32.69	32.69	76	76.61	76	33.1	33.9	56.3	32.7	33.5	57.5	29295	25300
850	*830*	*830*	*1930*	*1946*	*1930*	*840*	*860*	*1480*	*830*	*850*	*1460*	*13300*	*11500*
36	34.41	34.41	82	82.63	82	35	36.6	60.9	35.4	36.2	60.9	30176	27533
900	*874*	*874*	*2083*	*2099*	*2083*	*890*	*930*	*1546*	*900*	*920*	*1548*	*13700*	*12500*
40	38.44	38.44	80.71	(1)	80.71	37.8	38	65.6	37.4	37.6	65.2	31460	29172
1000	*976*	*976*	*2050*		*2050*	*960*	*965*	*1665*	*950*	*955*	*1655*	*14300*	*13260*
42	40.19	40.19	82.68	(1)	82.68	40.9	41.7	72.8	40.6	41.3	71.7	36080	33660
1050	*1020*	*1020*	*2100*		*2100*	*1040*	*1060*	*1850*	*1030*	*1050*	*1820*	*16400*	*15300*
48	45.94	45.94	94.49	(1)	94.49	46.9	46.3	78.3	46.5	45.9	77.6	49940	46200
1200	*1166*	*1166*	*2400*		*2400*	*1190*	*1175*	*1990*	*1180*	*1165*	*1970*	*22700*	*21000*
56	53.56	53.56	106.3	(1)	106.3	54.5	54.3	93.5	54.2	53.5	92.6	81400	30800
1400	*1360*	*1360*	*2700*		*2700*	*1385*	*1380*	*2375*	*1376*	*1360*	*2352*	*37000*	*14000*

(1) Contact our sales representative for more information.

DIMENSIONS AND WEIGHTS

ASME CLASS 600 (PN 100)

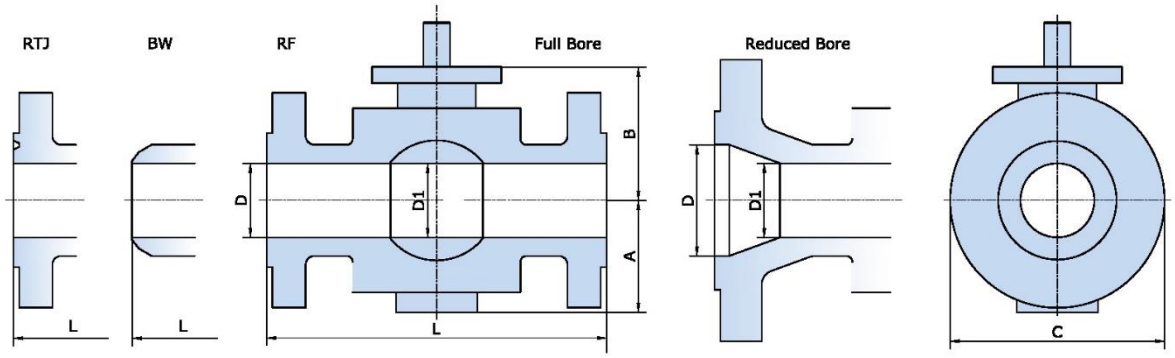

ASME CLASS 600 (PN 100) REDUCED BORE

Size *in/mm*	D	D1	L			Casting			Forging			Weight	
			RF	RTJ	BW	A	B	C	A	B	C	RF/RTJ *(lb/kg)*	BW *(lb/kg)*
2x1 ½	1.93	1.5	11.5	11.62	11.5	3.7	5.28	6.5	3.3	4.5	6.5	53	46
50x40	*49*	*38*	*292*	*295*	*292*	*94*	*134*	*165*	*83*	*115*	*165*	*24*	*21*
2 ½x2	2.44	1.93	13	13.13	13	3.7	5.7	7.5	3.3	5	7.5	95	64
65x50	*62*	*49*	*330*	*333*	*330*	*95*	*145*	*190*	*83*	*126*	*190*	*43*	*29*
3x2	2.94	1.93	14	14.13	14	3.7	5.7	8.3	3.3	5	8.3	93	86
80x50	*74*	*49*	*356*	*359*	*356*	*95*	*145*	*210*	*83*	*126*	*210*	*42*	*39*
4x3	3.94	2.94	17	17.13	17	5.4	7.2	10.8	5.5	6.1	10.8	187	150
100x80	*100*	*74*	*432*	*435*	*432*	*138*	*184*	*275*	*138*	*155*	*275*	*85*	*68*
6x4	5.94	3.94	22	22.13	22	7	8.2	14	7	7	14	330	187
150x100	*150*	*100*	*559*	*562*	*559*	*178*	*208*	*355*	*178*	*177*	*355*	*150*	*85*
8x6	7.94	5.94	26	26.13	26	8.3	9.8	16.5	8.3	9	16.5	638	528
200x150	*201*	*150*	*660*	*663*	*660*	*210*	*250*	*420*	*210*	*228*	*420*	*290*	*240*
10x8	9.94	7.94	31	31.13	31	9.6	11.1	20	9.6	10.5	20	1256	1167
250x200	*252*	*201*	*787*	*790*	*787*	*245*	*283*	*510*	*245*	*267*	*510*	*570*	*530*
12x10	11.94	9.94	33	33.13	33	11.4	12.6	22	11.9	12.3	22	1762	1608
300x250	*303*	*252*	*838*	*841*	*838*	*290*	*320*	*560*	*302*	*312*	*560*	*800*	*730*
14x10	13.19	9.94	35	35.13	35	11.4	12.6	23.8	11.9	12.3	23.8	2489	2247
350x250	*334*	*252*	*889*	*892*	*889*	*290*	*320*	*605*	*302*	*312*	*605*	*1130*	*1020*
16x12	15.19	11.94	39	39.13	39	14.1	15.4	27	13.8	14.5	27	3414	2930
400x300	*385*	*303*	*991*	*994*	*991*	*360*	*390*	*685*	*350*	*368*	*685*	*1550*	*1330*
18x14	17.19	13.19	43	43.13	43	15.6	16.1	29.3	15.2	15.6	29.3	4405	3965
450x350	*436*	*334*	*1092*	*1095*	*1092*	*395*	*410*	*745*	*385*	*396*	*745*	*2000*	*1800*
20x16	19.19	15.19	47	47.25	47	16.7	17.2	32	17.3	17.5	32.1	5727	5286
500x400	*487*	*385*	*1194*	*1200*	*1194*	*425*	*436*	*815*	*440*	*444*	*815*	*2600*	*2400*
24x20	23.19	19.19	55	55.38	55	22.6	22.7	37	20.6	20.7	37	6500	7819
600x500	*589*	*487*	*1397*	*1407*	*1397*	*575*	*576*	*940*	*522*	*525*	*940*	*3950*	*3550*
30x24	28.94	23.19	61	65.5	65	23.8	25.2	42.9	24.4	25.2	42.9	18722	17621
750x600	*735*	*589*	*1651*	*1664*	*1651*	*605*	*640*	*1090*	*619*	*641*	*1090*	*8500*	*8000*
36x30	34.41	28.94	82	82.63	82	35	36.6	60.9	35.4	36.2	60.9	23965	20925
900x750	*874*	*735*	*2083*	*2099*	*2083*	*890*	*930*	*1546*	*900*	*920*	*1548*	*10880*	*9500*

(1) Contact our sales representative for more information.

TRUNNION BALL VALVE

DIMENSIONS AND WEIGHTS — *ASME CLASS 900 (PN 150)*

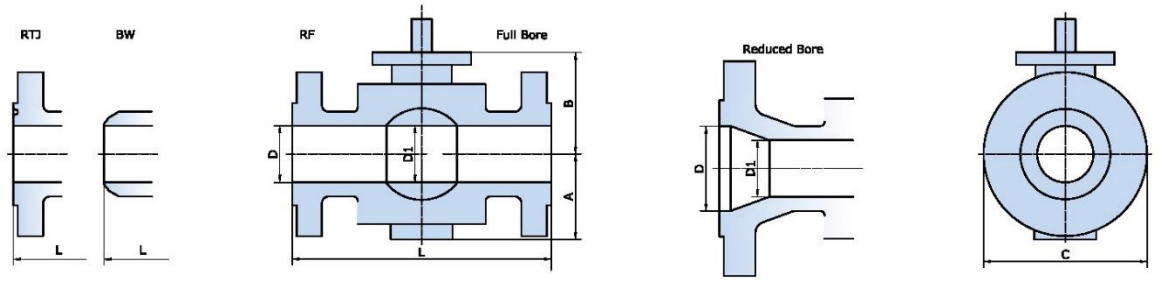

ASME CLASS 900 (PN 150) FULL BORE

Size *in/mm*	D	D1	L			Casting			Forging			Weight	
			RF	RTJ	BW	A	B	C	A	B	C	RF/RTJ *(lb/kg)*	BW *(lb/kg)*
2 *50*	1.93 *49*	1.93 *49*	14.5 *368*	14.63 *371*	14.5 *368*	4.3 *108*	5.5 *140*	8.5 *215*	4.3 *108*	5.5 *140*	8.5 *215*	*128* *58*	*119* *54*
2 ½ *65*	2.44 *62*	2.44 *62*	16.5 *419*	16.62 *422*	16.5 *419*	4.8 *123*	6.3 *160*	9.6 *245*	4.8 *123*	6.3 *160*	9.6 *245*	*152* *69*	*139* *63*
3 80	2.94 *74*	2.94 *74*	15 *381*	15.13 *384*	15 *381*	4.7 *120*	6.3 *161*	9.4 *240*	4.7 *120*	6.3 *161*	9.4 *240*	*198* *90*	*187* *85*
4 *100*	3.94 *100*	3.94 *100*	18 *457*	18.13 *460*	18 *457*	5.7 *145*	7.1 *180*	11.4 *290*	5.7 *145*	7.1 *180*	11.4 *290*	*295* *134*	*253* *115*
5 *125*	4.76 *121*	4.76 *121*	22 *559*	22.13 *562*	22 *559*	6.7 *170*	8.5 *215*	13.8 *350*	6.7 *170*	8.5 *215*	13.8 *350*	*517* *235*	*429* *195*
6 *150*	5.94 *150*	5.94 *150*	24 *610*	24.13 *613*	24 *610*	7.3 *185*	9.4 *239*	15 *380*	7.3 *185*	9.4 *239*	15 *380*	*661* *300*	*617* *280*
8 *200*	7.94 *201*	7.94 *201*	29 *737*	29.13 *740*	29 *737*	7.7 *295*	11.3 *288*	18.5 *470*	7.7 *295*	11.3 *288*	18.5 *470*	*1196* *543*	*1123* *510*
10 *250*	9.94 *252*	9.94 *252*	33 *838*	33.13 *841*	33 *838*	13.8 *350*	13.8 *350*	21.5 *545*	13.8 *350*	13.8 *350*	21.5 *545*	*2115* *960*	*1872* *850*
12 *300*	11.94 *303*	11.94 *303*	38 *965*	38.13 *968*	38 *965*	14.6 *370*	15.3 *388*	24 *610*	14.6 *370*	15.3 *388*	24 *610*	*3062* *1390*	*2863* *1300*
14 *350*	12.69 *322*	12.69 *322*	40.5 *1029*	40.88 *1039*	40.5 *1029*	16.9 *430*	16.9 *430*	26.2 *665*	16.1 *410*	16.1 *410*	25.9 *658*	*3414* *1550*	*2930* *1330*
16 *400*	14.69 *373*	14.69 *373*	44.5 *1130*	44.88 *1140*	44.5 *1130*	17.7 *450*	18.1 *460*	29.5 *750*	17.7 *450*	18.1 *460*	29.5 *750*	*4092* *1860*	*3190* *1450*
18 *450*	16.69 *423*	16.69 *423*	48 *1219*	48.5 *1232*	48 *1219*	19.3 *490*	20.9 *530*	32.3 *820*	19.3 *490*	20.9 *530*	32.3 *820*	*5841* *2655*	*5220* *2370*
20 *500*	18.56 *471*	18.56 *471*	52 *1321*	52.5 *1334*	52 *1321*	23.2 *590*	22.2 *565*	36.5 *928*	23.2 *590*	22.2 *565*	36.5 *928*	*7379* *3500*	*6828* *3100*
24 *600*	22.44 *570*	22.44 *570*	61 *1549*	61.75 *1568*	61 *1549*	24.8 *630*	24.2 *615*	41.7 *1060*	24.8 *630*	24.2 *615*	41.7 *1060*	*14053* *6380*	*13436* *6100*
26 *650*	24.31 *617*	24.31 *617*	65 *1651*	65.88 *1673*	(1)	26.8 *680*	27.6 *700*	45.7 *1160*	26.8 *680*	27.6 *700*	45.7 *1160*	*14850* *6750*	*11968* *5440*
28 *700*	26.19 *665*	26.19 *665*	69 *1753*	69.88 *1775*	(1)	29.3 *743*	29.5 *750*	50.6 *1285*	29.3 *743*	29.5 *750*	50.6 *1285*	*19250* *8750*	*16390* *7450*
30 *750*	28.06 *712*	28.06 *712*	74 *1880*	74.88 *1902*	(1)	31.5 *800*	31.5 *800*	53.5 *1360*	31.5 *800*	31.5 *800*	53.5 *1360*	*25300* *11500*	*21340* *9700*

ASME CLASS 900 (PN 150) REDUCED BORE

Size *in/mm*	D	D1	L			Casting			Forging			Weight	
			RF	RTJ	BW	A	B	C	A	B	C	RF/RTJ *(lb/kg)*	BW *(lb/kg)*
2x1 ½ *50x40*	1.93 *49*	1.5 *38*	14.5 *215*	14.62 *371*	14.5 *368*	4.3 *108*	4.5 *115*	8.5 *215*	4.3 *108*	4.5 *115*	*8.5* *215*	*99* *45*	*88* *40*
2 ½x2 *65x50*	2.44 *62*	1.93 *49*	16.5 *419*	16.63 *422*	16.5 *419*	4.3 *108*	5.1 *140*	9.6 *245*	4.3 *108*	5.1 *140*	*9.6* *245*	*128* *58*	*115* *52*
3x2 *80x50*	2.94 *74*	1.93 *49*	15 *381*	15.13 *384*	15 *381*	4.3 *108*	5.1 *140*	9.4 *240*	4.3 *108*	5.1 *140*	*9.4* *240*	*163* *74*	*110* *50*
4x3 *100x80*	3.94 *100*	2.94 *74*	18 *457*	18.13 *460*	18 *457*	5.7 *145*	6.3 *161*	11.4 *290*	5.7 *145*	6.3 *161*	*11.4* *290*	*264* *120*	*220* *100*
6x4 *150x100*	5.94 *150*	3.94 *100*	24 *610*	24.13 *613*	24 *610*	7.5 *190*	7.1 *180*	15 *380*	7.5 *190*	7.1 *180*	*15* *380*	*471* *214*	*436* *198*
8x6 *200x150*	7.94 *201*	5.94 *150*	29 *737*	29.13 *740*	29 *737*	9.3 *235*	9.4 *239*	18.5 *470*	9.3 *235*	9.4 *239*	*18.5* *470*	*817* *371*	*771* *350*
10x8 *250x200*	9.94 *252*	7.94 *201*	33 *838*	33.13 *841*	33 *838*	11.3 *295*	11.3 *288*	21.5 *545*	11.3 *295*	11.3 *288*	*21.5* *545*	*1542* *700*	*1366* *620*
12x10 *300x250*	11.94 *303*	9.94 *252*	38 *965*	38.13 *968*	38 *965*	13 *330*	13.8 *350*	24 *610*	13 *330*	13.8 *350*	*24* *610*	*2643* *1200*	*1936* *880*
14x10 *350x250*	14.69 *322*	11.94 *303*	44.5 *1130*	44.88 *1140*	44.5 *1130*	14.6 *370*	15.3 *388*	24 *610*	14.6 *370*	15.3 *388*	*24* *610*	*2974* *1350*	*2467* *1120*
16x12 *400x300*	14.69 *373*	11.94 *303*	44.5 *1130*	44.88 *1140*	44.5 *1130*	14.6 *370*	15.6 *388*	24 *610*	14.6 *370*	15.6 *388*	*24* *610*	*3855* *1750*	*3729* *1720*
18x14 *450x350*	16.69 *423*	12.69 *322*	48 *1219*	48.5 *1232*	48 *1219*	16.9 *430*	16.9 *430*	30.9 *785*	16.1 *410*	16.1 *410*	*30.9* *785*	*5286* *2400*	*4956* *2250*
20x16 *500x400*	18.56 *471*	14.69 *373*	52 *1321*	52.5 *1334*	52 *1321*	17.7 *450*	18.1 *460*	33.7 *855*	17.7 *450*	18.1 *460*	*33.7* *855*	*6993* *3175*	*6388* *2900*
24x20 *600x500*	22.44 *570*	18.56 *471*	61 *1549*	61.75 *1568*	61 *1549*	23.2 *590*	22.2 *565*	40.9 *1040*	23.2 *590*	22.2 *565*	*40.9* *1040*	*11650* *5289*	*10793* *4900*
30x24 *750x600*	28.06 *712*	22.44 *570*	74 *1880*	74.88 *1902*	(1)	24.8 *630*	24.2 *615*	48.4 *1230*	24.8 *630*	24.2 *615*	48.4 *1230*	(1)	(1)

(1) Contact our sales representative for more information.

Engineered Solutions

TRUNNION BALL VALVE

DIMENSIONS AND WEIGHTS — *ASME CLASS 1500 (PN 250)*

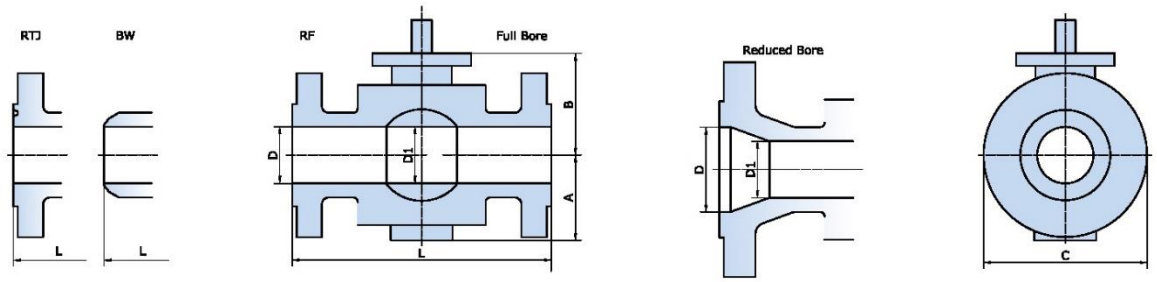

ASME CLASS 1500 (PN 250) FULL BORE

Size *in/mm*	D	D1	L			Casting			Forging			Weight	
			RF	RTJ	BW	A	B	C	A	B	C	RF/RTJ *(lb/kg)*	BW *(lb/kg)*
2	1.93	1.93	14.5	14.63	14.5	4.3	5.5	8.5	4.3	5.5	8.5	128	97
50	*49*	*49*	*368*	*371*	*368*	*108*	*140*	*215*	*108*	*140*	*215*	58	44
2 ½	2.44	2.44	16.5	16.62	16.5	4.8	6.3	9.6	4.8	6.3	9.6	176	165
65	*62*	*62*	*419*	*422*	*419*	*123*	*160*	*245*	*123*	*160*	*245*	80	75
3	2.94	2.94	18.5	18.63	18.5	5.5	7.4	10.4	5.5	7.4	10.4	333	274
80	*74*	*74*	*470*	*473*	*470*	*140*	*187*	*265*	*140*	*187*	*265*	151	135
4	3.94	3.94	21.5	21.63	21.5	6.5	7.9	12.2	6.5	7.9	12.2	441	414
100	*100*	*100*	*546*	*549*	*546*	*165*	*201*	*310*	*165*	*201*	*310*	200	188
5	4.37	4.37	26.5	27.04	26.5	6.9	8.7	14.8	6.9	8.7	14.8	847	642
125	*111*	*111*	*673*	*676*	*673*	*175*	*220*	*375*	*175*	*220*	*375*	385	292
6	5.69	5.69	27.75	28	27.75	9.6	11.3	16.3	9.6	11.3	16.3	1123	1057
150	*144*	*144*	*705*	*711*	*705*	*219*	*288*	*415*	*219*	*288*	*415*	510	480
8	7.56	7.56	32.75	33.13	32.75	11.6	12.8	19.1	11.6	12.8	19.1	1804	1608
200	*192*	*191*	*832*	*842*	*832*	*295*	*325*	*485*	*295*	*325*	*485*	819	730
10	9.44	9.44	39	39.38	39	14.2	15.9	23.6	14.2	15.9	23.6	3282	2753
250	*239*	*239*	*991*	*1001*	*991*	*360*	*405*	*600*	*360*	*405*	600	1490	1250
12	11.31	11.31	44.5	45.13	44.5	15.7	17	27.2	15.7	17	27.2	4626	4295
300	*287*	*287*	*1130*	*1146*	*1130*	*400*	*432*	*692*	*400*	*432*	692	2100	1950
14	12.44	12.44	49.5	50.25	49.5	19.3	18.9	30.7	18.7	18.5	30.1	6454	6057
350	*315*	*315*	*1259*	*1276*	*1257*	*490*	*480*	*780*	*475*	*469*	765	2930	2750
16	14.19	14.19	54.5	55.38	54.5	24.8	23.5	38.6	24.8	23.5	38.6	8194	7709
400	*360*	*360*	*1384*	*1407*	*1384*	*629*	*598*	*980*	*629*	*598*	980	3720	3500
18	16	16	60.5	61.38	(1)	24	24.4	39.4	24	24.4	39.4	12775	11013
450	*406*	*406*	*1537*	*1559*		*610*	*620*	*1000*	*610*	*620*	1000	5800	5100
20	17.88	17.88	65.5	66.38	(1)	25.6	25.6	41.9	25.6	25.6	41.9	19383	17621
500	*454*	*454*	*1664*	*1686*		*650*	*650*	*1065*	*650*	*650*	1065	8800	8000
24	21.5	21.5	76.5	77.63	(1)	29.9	31.4	50.2	29.9	31.4	50.2	28634	26432
600	*546*	*546*	*1943*	*1972*		*760*	*798*	*1275*	*760*	*798*	1275	13000	12000

ASME CLASS 1500 (PN 250) REDUCED BORE

Size *in/mm*	D	D1	L			Casting			Forging			Weight	
			RF	RTJ	BW	A	B	C	A	B	C	RF/RTJ *(lb/kg)*	BW *(lb/kg)*
2x1 ½	1.93	1.5	14.5	14.62	14.5	4.3	4.5	8.5	4.3	4.5	8.5	*95*	*75*
50x40	*49*	*38*	*368*	*371*	*368*	*108*	*115*	*215*	*108*	*115*	*215*	*43*	*34*
2 ½x2	2.44	1.93	16.5	16.63	16.5	4.3	5.5	9.6	4.3	5.5	9.6	*150*	*139*
65x50	*62*	*49*	*419*	*422*	*419*	*108*	*140*	*245*	*108*	*140*	*245*	*68*	*63*
3x2	2.94	1.93	18.5	18.63	18.5	4.3	5.5	10.6	4.3	5.5	10.6	*189*	*167*
80x50	*74*	*49*	*470*	*473*	*470*	*108*	*140*	*265*	*108*	*140*	*265*	*86*	*76*
4x3	3.94	2.94	21.5	21.63	21.5	6.1	7.4	12.2	6.1	7.4	12.2	*414*	*388*
100x80	*100*	*74*	*546*	*549*	*546*	*155*	*187*	*310*	*155*	*187*	*310*	*188*	*176*
6x4	5.69	3.94	27.75	28	27.75	7.8	7.9	15.6	7.8	7.9	15.6	*678*	*645*
150x100	*144*	*100*	*705*	*711*	*705*	*198*	*201*	*395*	*198*	*201*	*395*	*308*	*293*
8x6	7.56	5.69	32.75	33.13	32.75	9.6	11.3	19.1	9.6	11.3	19.1	*1575*	*1476*
200x150	*192*	*144*	*832*	*841*	*832*	*243*	*288*	*485*	*243*	*288*	*485*	*715*	*670*
10x8	9.44	7.56	39	39.38	39	11.6	12.8	23	11.6	12.8	23	*2698*	*2533*
250x200	*239*	*192*	*991*	*1001*	*991*	*295*	*325*	*585*	*295*	*325*	*585*	*1225*	*1150*
12x10	11.31	9.44	44.5	45.13	44.5	14.2	15.9	26.6	14.2	15.9	26.6	*4031*	*3634*
300x250	*287*	*239*	*1130*	*1146*	*1130*	*360*	*405*	*675*	*360*	*405*	*675*	*1830*	*1650*
14x10	12.44	9.44	49.5	50.25	49.5	14.2	15.9	29.5	14.2	15.9	29.5	*5595*	*4846*
350x250	*315*	*239*	*1257*	*1276*	*1257*	*360*	*405*	*750*	*360*	*405*	*750*	*2540*	*2200*
16x12	14.19	11.31	54.5	55.38	54.5	15.7	17	32.5	15.7	17	32.5	*7390*	*6608*
400x300	*360*	*287*	*1384*	*1407*	*1384*	*400*	*432*	*825*	*400*	*432*	*825*	*3355*	*3000*
18x14	16	12.44	60.5	61.38	60.5	18.7	18.5	36	18.7	18.5	36	*10474*	*8811*
450x350	*406*	*315*	*1537*	*1559*	*1537*	*475*	*469*	*915*	*475*	*469*	*915*	*4755*	*4000*
20x16	17.88	14.19	65.5	66.38	(1)	24.8	23.5	38.8	24.8	23.5	38.8	*16079*	*14978*
500x400	*454*	*360*	*1664*	*1686*		*629*	*598*	*985*	*629*	*598*	*985*	*7300*	*6800*
24x20	21.5	17.88	76.5	77.63	76.5	25.6	25.6	46.1	25.6	25.6	46.1	*20220*	*17621*
600x500	*546*	*454*	*1943*	*1971*	*1943*	*650*	*650*	*1170*	*650*	*650*	*1170*	*9180*	*8000*

(1) Contact our sales representative for more information.

DIMENSIONS AND WEIGHTS

ASME CLASS 2500 (PN 420)

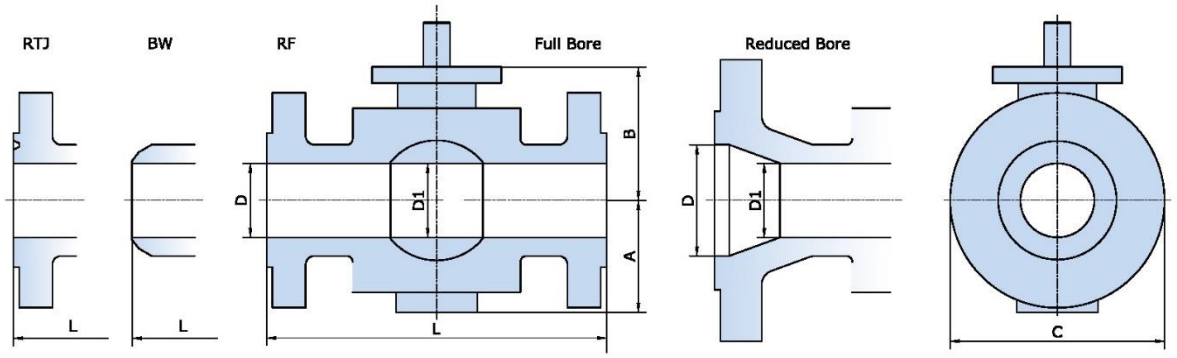

ASME CLASS 2500 (PN 420) FULL BORE

Size in/mm	D	D1	L			Casting			Forging			Weight	
			RF	RTJ	BW	A	B	C	A	B	C	RF/RTJ (lb/kg)	BW (lb/kg)
2 50	1.69 42	1.69 42	17.75 451	17.88 454	17.75 451	/	/	/	5.5 139	7.2 183	9.3 235	348 158	308 140
2 ½ 65	2.06 52	2.06 52	20.32 508	20.56 514	20.32 508	/	/	/	5.2 133	6.8 173	10.4 265	378 172	341 155
3 80	2.44 62	2.44 62	22.75 578	23 584	22.75 578	/	/	/	6.3 !60	8.1 205	12 305	529 240	474 215
4 100	3.44 87	3.44 87	26.5 673	26.88 683	26.5 673	/	/	/	7.4 188	6.8 173	14 355	969 440	881 400
5 125	3.62 92	3.62 92	31.26 794	31.77 807	31.26 794	/	/	/	7.1 180	10 255	16.5 420	1652 750	1586 720
6 150	5.19 131	5.19 131	36 914	36.5 927	36 914	/	/	/	10.8 275	13.4 341	19.1 485	2115 960	1982 900
8 200	7.06 179	7.06 179	40.25 1022	40.88 1038	40.25 1022	/	/	/	15 380	16.5 418	24.2 615	2885 1310	2643 1200
10 250	8.81 223	8.81 223	50 1270	50.88 1292	50 1270	/	/	/	18.9 480	20.5 520	31.9 810	4626 2110	4295 1950
12 300	10.44 265	10.44 265	56 1422	56.88 1444	56 1422	/	/	/	19.7 500	21.3 540	33.9 860	7115 3230	6608 3000

ASME CLASS 2500 (PN 420) REDUCED BORE

Size in/mm	D	D1	L			Casting			Forging			Weight	
			RF	RTJ	BW	A	B	C	A	B	C	RF/RTJ (lb/kg)	BW (lb/kg)
2x1 ½ 50x40	1.69 42	1.5 38	17.75 368	17.88 454	17.75 451	/	/	/	4.6 118	5.5 140	9.3 235	275 125	231 105
2 ½x2 65x50	2.06 52	1.69 42	20 508	20.25 514	20 508	/	/	/	5.5 139	7.2 183	10.4 265	330 150	297 135
3x2 80x50	2.44 62	1.69 42	22.75 578	23 584	22.75 578	/	/	/	5.5 139	7.2 183	12 305	430 195	396 180
4x3 100x80	3.44 87	2.66 62	26.5 673	26.88 683	26.5 673	/	/	/	7 178	10.4 265	14 355	859 390	771 350
6x4 150x100	5.19 131	3.44 87	36 914	36.5 927	36 914	/	/	/	9.6 243	10.7 273	19.1 485	1432 650	1322 600
8x6 200x150	7.06 179	5.19 131	40.25 1022	40.88 1038	40.25 1022	/	/	/	10.8 275	13.4 341	21.7 550	2500 1135	2203 1000
10x8 250x200	8.81 223	7.06 179	50 1270	50.88 1292	50 1270	/	/	/	15 380	16.5 418	26.6 675	3778 1715	3304 1500
12x10 300x250	10.44 265	8.81 223	56 1422	56.88 1445	56 1422	/	/	/	18.9 480	20.5 520	31.9 810	5881 2670	5286 2400

(1) Contact our sales representative for more information.

Engineered Solutions

TOP MOUNTING DIMENSIONS AND TORQUE

NPS 2-4 (DN 50-100)

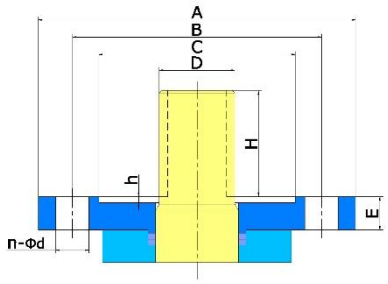

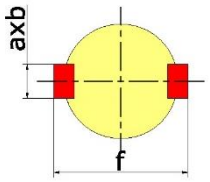

Size *in/mm*	Rating *Class/PN*	Torque(1) *ft-lb/N-m*	ISO F#	A	B	C	D	h	E	n-Φd(2)	H	Drive Key axb	f	Gearbox Model
2 *50*	150 *20*	44 *60*	F10	4.92 *125*	4.02 *102*	2.76 *70*	0.945 *24*	0.118 *3*	0.63 *16*	4-Φ0.472 *4-Φ12*	1.575 *40*	0.315 x 0.276 *8x7*	1.063 *27*	GE-A1
	300 *50*	81 *110*	F10	4.92 *125*	4.02 *102*	2.76 *70*	0.945 *24*	0.118 *3*	0.63 *16*	4-Φ0.472 *4-Φ12*	1.575 *40*	0.315 x 0.276 *8x7*	1.063 *27*	GE-A1
	600 *100*	111 *150*	F10	4.92 *125*	4.02 *102*	2.76 *70*	0.945 *24*	0.118 *3*	0.63 *16*	4-Φ0.472 *4-Φ12*	1.575 *40*	0.315 x 0.276 *8x7*	1.063 *27*	GE-A1
	900 *150*	133 *180*	F12	5.91 *150*	4.92 *125*	3.35 *85*	1.102 *28*	0.118 *3*	0.83 *21*	4-Φ0.551 *4-Φ14*	1.772 *45*	0.315 x 0.276 *8x7*	1.063 *27*	GE-A2
	1500 *250*	148 *200*	F12	5.91 *150*	4.92 *125*	3.35 *85*	1.102 *28*	0.118 *3*	0.83 *21*	4-Φ0.551 *4-Φ14*	1.772 *45*	0.315 x 0.276 *8x7*	1.063 *27*	GE-A2
	2500 *420*	295 *400*	F16	8.27 *210*	6.5 *165*	5.12 *130*	1.417 *36*	0.118 *3*	1.10 *28*	4-Φ0.866 *4-Φ22*	2.362 *60*	0.394 x 0.315 *10x8*	1.339 *34*	GE-A4
2 ½ *65*	150 *20*	59 *80*	F10	4.92 *125*	4.02 *102*	2.76 *70*	0.945 *24*	30.118 *3*	0.63 *16*	4-Φ0.472 *4-Φ12*	1.575 *40*	0.315 x 0.276 *8 x 7*	1.063 *27*	GE-A1
	300 *50*	96 *130*	F10	4.92 *125*	4.02 *102*	2.76 *70*	0.945 *24*	30.118 *3*	0.63 *16*	4-Φ0.472 *4-Φ12*	1.575 *40*	0.315 x 0.276 *8x7*	1.063 *27*	GE-A1
	600 *100*	133 *180*	F12	5.91 *150*	4.92 *125*	3.35 *85*	1.102 *28*	0.118 *3*	0.83 *21*	4-Φ0.551 *4-Φ14*	1.772 *45*	0.315 x 0.276 *8x7*	1.063 *27*	GE-A2
	900 *150*	177 *240*	F12	5.91 *150*	4.92 *125*	3.35 *85*	1.102 *28*	0.118 *3*	0.83 *21*	4-Φ0.551 *4-Φ14*	1.772 *45*	0.315 x 0.276 *8x7*	1.063 *27*	GE-A2
	1500 *250*	221 *300*	F14	6.89 *175*	5.51 *140*	3.94 *100*	1.417 *36*	0.157 *4*	0.98 *25*	4-Φ0.709 *4-Φ18*	2.362 *60*	0.394 x 0.315 *10 x 8*	1.339 *34*	GE-A3
	2500 *420*	354 *480*	F16	8.27 *210*	6.5 *165*	5.12 *130*	1.575 *40*	0.197 *5*	1.18 *30*	4-Φ0.866 *4-Φ22*	2.362 *60*	0.472 x 0.315 *12x8*	1.693 *43*	GE-A4
3 *80*	150 *20*	74 *100*	F10	4.92 *125*	4.02 *102*	2.76 *70*	0.945 *24*	0.118 *3*	0.87 *22*	4-Φ0.472 *4-Φ12*	1.575 *40*	0.315 x 0.276 *8x7*	1.063 *27*	GE-A1
	300 *50*	96 *130*	F10	4.92 *125*	4.02 *102*	2.76 *70*	0.945 *24*	0.118 *3*	0.87 *22*	4-Φ0.472 *4-Φ12*	1.575 *40*	0.315 x 0.276 *8x7*	1.063 *27*	GE-A1
	600 *100*	148 *200*	F12	5.91 *150*	4.92 *125*	3.35 *85*	1.102 *28*	0.118 *3*	0.91 *23*	4-Φ0.551 *4-Φ14*	1.772 *45*	0.315 x 0.276 *8 x 7*	1.063 *27*	GE-A2
	900 *150*	207 *280*	F14	6.89 *175*	5.51 *140*	3.94 *100*	1.417 *36*	0.157 *4*	0.98 *25*	4-Φ0.709 *4-Φ18*	2.362 *60*	0.394 x 0.315 *10x8*	1.339 *34*	GE-A3
	1500 *250*	354 *480*	F14	6.89 *175*	5.51 *140*	3.94 *100*	1.575 *40*	0.157 *4*	1.14 *29*	4-Φ0.709 *4-Φ18*	2.362 *60*	0.472 x 0.315 *12x8*	1.693 *43*	GE-A3
	2500 *420*	443 *600*	F16	8.27 *210*	6.5 *165*	5.12 *130*	1.772 *45*	0.197 *5*	1.18 *30*	4-Φ0.866 *4-Φ22*	2.756 *70*	0.551 x 0.354 *14 x 9*	1.949 *49.5*	GE-A4
4 *100*	150 *20*	89 *120*	F12	5.91 *150*	4.92 *125*	3.35 *85*	1.102 *28*	0.118 *3*	0.91 *23*	4-Φ0.551 *4-Φ14*	1.772 *45*	0.315 x 0.276 *8x7*	1.063 *27*	GE-A2
	300 *50*	133 *180*	F12	5.91 *150*	4.92 *125*	3.35 *85*	1.102 *28*	0.118 *3*	0.91 *23*	4-Φ0.551 *4-Φ14*	1.772 *45*	0.315 x 0.276 *8x7*	1.063 *27*	GE-A2
	600 *100*	207 *280*	F14	6.89 *175*	5.51 *140*	3.94 *100*	1.417 *36*	0.157 *4*	0.98 *25*	4-Φ0.709 *4-Φ18*	2.362 *60*	0.394 x 0.315 *10x8*	1.339 *34*	GE-A3
	900 *150*	369 *500*	F14	6.89 *175*	5.51 *140*	3.94 *100*	1.417 *36*	0.157 *4*	0.98 *25*	4-Φ0.709 *4-Φ18*	2.362 *60*	0.394 x 0.315 *10x8*	1.339 *34*	GE-A3
	1500 *250*	590 *800*	F16	8.27 *210*	6.5 *165*	5.12 *130*	1.772 *45*	0.197 *5*	1.18 *30*	4-Φ0.866 *4-Φ22*	2.756 *70*	0.551 x 0.354 *14 x 9*	1.949 *49.5*	GE-A4
	2500 *420*	1475 *2000*	F16	8.27 *210*	6.5 *165*	5.12 *130*	1.969 *50*	0.197 *5*	1.18 *30*	4-Φ0.866 *4-Φ22*	2.756 *70*	0.551 x 0.354 *14 x 9*	2.244 *57*	GE-A5

Note:

(1) Torque doesn't include safety factor. The torque is based on seats of PTFE/RPTFE (Class 150 – 300), Nylon (Class 900 – 1500), and PEEK (Class 2500). Torque shall beas follows if other than the base seat material is selected:

PTFE/RPTFE	Nylon	Devlon	PCTFE	TFM	Delrin	Molon	PPL	PEEK	Metal
Base	x 1	x 1	x 0.8	X 0.8	x 1	X 1	X 0.8	x 1.3	x 2.2

(2) Number of bolt holes and bolt hole diameter.

TOP MOUNTING DIMENSIONS AND TORQUE (CONT'D)

NPS 6-10 (DN 150-300)

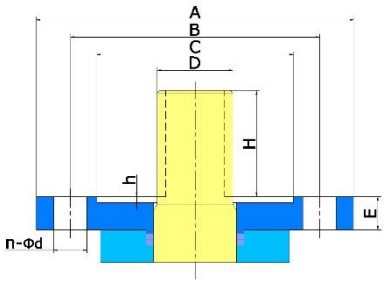

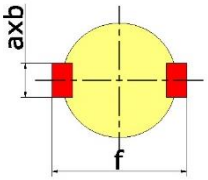

Size *in/mm*	Rating *Class/PN*	Torque[1] *ft-Lb/N-m*	ISO F#	A	B	C	D	h	E	n-Φd[2]	H	Drive Key a x b	f	Gearbox Model
6 *150*	150 *20*	369 *500*	F16	8.27 *210*	6.5 *165*	5.12 *130*	1.417 *36*	0.197 *5*	0.984 *25*	4-Φ0.866 *4-Φ22*	2.756 *70*	0.551 x 0.315 *10 x 8*	1.339 *34*	GE-A3
	300 *50*	516 *700*	F16	8.27 *210*	6.5 *165*	5.12 *130*	1.417 *36*	0.197 *5*	0.984 *25*	4-Φ0.866 *4-Φ22*	2.756 *70*	0.551 x 0.315 *10 x 8*	1.339 *34*	GE-A3
	600 *100*	811 *1100*	F16	8.27 *210*	6.5 *165*	5.12 *130*	1.772 *45*	0.197 *5*	1.181 *30*	4-Φ0.866 *4-Φ22*	2.756 *70*	0.551 x 0.354 *14 x 9*	1.949 *49.5*	GE-A4
	900 *150*	1549 *2100*	F16	8.27 *210*	6.5 *165*	5.12 *130*	1.969 *50*	0.197 *5*	1.181 *30*	4-Φ0.866 *4-Φ22*	2.756 *70*	0.551 x 0.354 *14 x 9*	2.244 *57*	GE-A5
	1500 *250*	2213 *3000*	F16	8.27 *210*	6.5 *165*	5.12 *130*	2.165 *55*	0.197 *5*	1.181 *30*	4-Φ0.866 *4-Φ22*	3.15 *80*	0.63 x 0.394 *16 x 10*	2.48 *63*	GE-A6
	2500 *420*	3688 *5000*	F25	11.81 *300*	10 *254*	7.87 *200*	2.559 *65*	0.197 *5*	1.378 *35*	4-Φ0.709 *4-Φ18*	3.543 *90*	0.709 x 0.433 *18 x 11*	2.874 *73*	GE-A9
8 *200*	150 *20*	443 *600*	F16	8.27 *210*	6.5 *165*	5.12 *130*	1.772 *45*	0.197 *5*	1.181 *30*	4-Φ0.866 *4-Φ22*	2.756 *70*	0.551 x 0.354 *14 x 9*	1.949 *49.5*	GE-A4
	300 *50*	811 *1100*	F16	8.27 *210*	6.5 *165*	5.12 *130*	1.772 *45*	0.197 *5*	1.181 *30*	4-Φ0.866 *4-Φ22*	2.756 *70*	0.551 x 0.354 *14 x 9*	1.949 *49.5*	GE-A4
	600 *100*	1401 *1900*	F16	8.27 *210*	6.5 *165*	5.12 *130*	1.969 *50*	0.197 *5*	1.181 *30*	4-Φ0.866 *4-Φ22*	2.756 *70*	0.551 x 0.354 *14 x 9*	2.244 *57*	GE-A6
	900 *150*	2581 *3500*	F25	11.81 *300*	10 *254*	7.87 *200*	2.165 *55*	0.197 *5*	1.181 *30*	8-Φ0.709 *8-Φ18*	3.15 *80*	0.63 x 0.394 *16 x 10*	2.48 *63*	GE-A8
	1500 *250*	4794 *6500*	F25	11.81 *300*	10 *254*	7.87 *200*	2.756 *70*	0.197 *5*	1.496 *38*	8-Φ0.709 *8-Φ18*	3.937 *100*	0.787 x 0.472 *20 x 12*	3.11 *79*	GE-B1
	2500 *420*	6269 *8500*	F30	13.78 *350*	11.73 *298*	9.06 *230*	3.543 *90*	0.197 *5*	1.496 *38*	8-Φ0.866 *8-Φ22*	4.724 *120*	0.984 x 0.551 *25 x 14*	3.937 *100*	GE-B2
10 *250*	150 *20*	738 *1000*	F16	8.27 *210*	6.5 *165*	5.12 *130*	1.969 *50*	0.197 *5*	1.063 *27*	4-Φ0.866 *4-Φ22*	2.756 *70*	0.551 x 0.354 *14 x 9*	2.244 *57*	GE-A5
	300 *50*	1475 *2000*	F16	8.27 *210*	6.5 *165*	5.12 *130*	1.969 *50*	0.197 *5*	1.063 *27*	4-Φ0.866 *4-Φ22*	2.756 *70*	0.551 x 0.354 *14 x 9*	2.244 *57*	GE-A5
	600 *100*	2581 *3500*	F25	11.81 *300*	10 *254*	7.87 *200*	2.559 *65*	0.197 *5*	1.260 *32*	8-Φ0.709 *8-Φ18*	3.543 *90*	0.709 x 0.433 *18 x 11*	2.874 *73*	GE-A8
	900 *150*	4057 *5500*	F25	11.81 *300*	10 *254*	7.87 *200*	2.756 *70*	0.197 *5*	1.417 *36*	8-Φ0.709 *8-Φ18*	3.937 *100*	0.787 x 0.472 *20 x 12*	3.11 *79*	GE-A9
	1500 *250*	7744 *10500*	F30	13.78 *350*	11.73 *298*	9.06 *230*	3.543 *90*	0.197 *5*	1.496 *38*	8-Φ0.866 *8-Φ22*	4.724 *120*	0.984 x 0.551 *25 x 14*	3.937 *100*	GE-B3
	2500 *420*	16226 *22000*	F35	16.34 *415*	14.02 *356*	10.24 *260*	3.937 *100*	0.197 *5*	1.575 *40*	8-Φ1.299 *8-Φ33*	5.512 *140*	1.102 x 0.63 *28 x 16*	4.409 *112*	GE-B5
12 *300*	150 *20*	1106 *1500*	F25	11.81 *300*	10 *254*	7.87 *200*	2.362 *60*	0.197 *5*	1.378 *35*	8-Φ0.709 *8-Φ18*	3.15 *80*	0.709 x 0.433 *18 x 11*	2.677 *68*	GE-A7
	300 *50*	2065 *2800*	F25	11.81 *300*	10 *254*	7.87 *200*	2.362 *60*	0.197 *5*	1.378 *35*	8-Φ0.709 *8-Φ18*	3.15 *80*	0.709 x 0.433 *18 x 11*	2.677 *68*	GE-A8
	600 *100*	4057 *5500*	F25	11.81 *300*	10 *254*	7.87 *200*	2.756 *70*	0.197 *5*	1.378 *35*	8-Φ0.709 *8-Φ18*	3.937 *100*	0.787 x 0.472 *20 x 12*	3.11 *79*	GE-A9
	900 *150*	6491 *8800*	F30	13.78 *350*	11.73 *298*	9.06 *230*	3.543 *90*	0.197 *5*	1.496 *38*	8-Φ0.866 *8-Φ22*	4.724 *120*	0.984 x 0.551 *25 x 14*	3.937 *100*	GE-B2
	1500 *250*	11801 *16000*	F35	16.34 *415*	10.24 *260*	14.02 *356*	3.937 *100*	0.197 *5*	1.575 *40*	8-Φ1.299 *8-Φ33*	5.512 *140*	1.102 x 0.63 *28 x 16*	4.409 *112*	GE-B4
	2500 *420*	18070 *24500*	F35	16.34 *415*	10.24 *260*	1402 *356*	3.937 *100*	0.197 *5*	1.575 *40*	8-Φ1.299 *8-Φ33*	5.512 *140*	1.102 x 0.63 *28 x 16*	4.409 *112*	GE-C3

Note:

(1) Torque doesn't include safety factor. The torque is based on seats of PTFE/RPTFE (Class 150 – 300), Nylon (Class 900 – 1500), and PEEK (Class 2500). Torque shall be as follows if other than the base seat material is selected:

PTFE/RPTFE	Nylon	Devlon	PCTFE	TFM	Delrin	Molon	PPL	PEEK	Metal
Base	x 1	x 1	x 0.8	X 0.8	x 1	X 1	X 0.8	x 1.3	x 2.2

(2) Number of bolt holes and bolt hole diameter.

TOP MOUNTING DIMENSIONS AND TORQUE (CONT'D)

NPS 14-24 (DN 350-600)

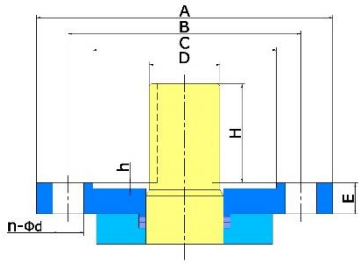

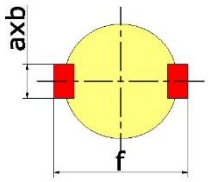

Size *in/mm*	Rating *Class/PN*	Torque[1] ft-lb/N-m	ISO F#	A	B	C	D	h	E	n-Φd[2]	H	Drive Key a x b	f	Gearbox Model
14 *350*	150 *20*	1328 *1800*	F25	11.81 *300*	10 *254*	7.87 *200*	2.559 *65*	0.197 *5*	1.299 *33*	8-Φ0.709 *8-Φ18*	3.543 *90*	0.709 x 0.433 *18x11*	2.874 *73*	GE-A7
	300 *50*	2655 *3600*	F25	11.81 *300*	10 *254*	7.87 *200*	2.559 *65*	0.197 *5*	1.299 *33*	8-Φ0.709 *8-Φ18*	3.543 *90*	0.709 x 0.433 *18x11*	2.874 *73*	GE-A9
	600 *100*	5163 *7000*	F25	11.81 *300*	10 *254*	7.87 *200*	3.15 *80*	0.197 *5*	1.378 *35*	8-Φ0.709 *8-Φ18*	4.724 *120*	0.866 x 0.551 *22x14*	3.543 *90*	GE-B1
	900 *150*	8998 *12200*	F30	13.78 *350*	11.73 *298*	9.06 *230*	3.937 *100*	0.197 *5*	1.378 *35*	8-Φ0.866 *8-Φ22*	5.512 *140*	1.102 x 0.63 *28x16*	4.409 *112*	GE-B3
	1500 *250*	13276 *18000*	F35	16.34 *415*	14.02 *356*	10.24 *260*	3.937 *100*	0.197 *5*	1.575 *40*	8-Φ1.299 *8-Φ33*	5.512 *140*	1.102 x 0.63 *28x16*	4.409 *112*	GE-B5
16 *400*	150 *20*	2508 *3400*	F25	11.81 *300*	10 *254*	7.78 *200*	3.15 *80*	0.197 *5*	1.378 *35*	8-Φ0.709 *8-Φ18*	4.724 *120*	0.866 x 0.551 *22x14*	3.543 *90*	GE-A8
	300 *50*	4720 *6400*	F25	11.81 *300*	10 *254*	7.78 *200*	3.15 *80*	0.197 *5*	1.378 *35*	8-Φ0.709 *8-Φ18*	4.724 *120*	0.866 x 0.551 *22x14*	3.543 *90*	GE-A9
	600 *100*	8113 *11000*	F30	13.78 *350*	11.73 *298*	9.06 *230*	3.937 *100*	0.197 *5*	1.378 *35*	8-Φ0.866 *8-Φ22*	5.512 *140*	1.102 x 0.63 *28x16*	4.409 *112*	GE-B3
	900 *150*	11432 *15500*	F35	16.34 *415*	14.02 *356*	10.24 *260*	3.937 *100*	0.197 *5*	1.575 *40*	8-Φ1.299 *8-Φ33*	5.512 *140*	1.102 x 0.63 *28x16*	4.409 *112*	GE-B4
	1500 *250*	18439 *25000*	F40	18.7 *475*	15.98 *406*	11.81 *300*	34.724 *120*	0.315 *8*	1.772 *45*	8-Φ1.535 *8-Φ39*	6.299 *160*	1.26 x 0.709 *32x18*	5.276 *134*	GE-C5
18 *450*	150 *20*	2950 *4000*	F25	11.81 *300*	10 *254*	7.87 *200*	3.15 *80*	0.197 *5*	1.378 *35*	8-Φ0.709 *8-Φ18*	4.724 *120*	0.866 x 0.551 *22x14*	3.543 *90*	GE-A9
	300 *50*	5532 *7500*	F25	11.81 *300*	10 *254*	7.87 *200*	3.15 *80*	0.197 *5*	1.378 *35*	8-Φ0.709 *8-Φ18*	4.724 *120*	0.866 x 0.551 *22x14*	3.543 *90*	GE-A9
	600 *100*	11063 *15000*	F35	16.34 *415*	14.02 *356*	10.24 *260*	3.937 *100*	0.197 *5*	1.575 *40*	8-Φ1.299 *8-Φ33*	5.512 *140*	1.102 x 0.63 *28x16*	4.409 *112*	GE-B4
	900 *150*	16226 *22000*	F35	16.34 *415*	14.02 *356*	10.24 *260*	4.724 *120*	0.197 *5*	1.575 *40*	8-Φ1.299 *8-Φ33*	6.299 *160*	1.26 x 0.709 *32x18*	5.276 *134*	GE-B5
	1500 *250*	26552 *36000*	F40	18.7 *475*	15.98 *406*	11.81 *300*	5.512 *140*	0.315 *8*	1.772 *45*	8-Φ1.535 *8-Φ39*	6.693 *170*	1.417 x 0.787 *36x20*	6.142 *156*	GE-B6
20 *500*	150 *20*	3319 *4500*	F30	13.78 *350*	11.73 *298*	9.06 *230*	3.543 *90*	0.197 *5*	1.496 *38*	8-Φ0.866 *8-Φ22*	4.724 *120*	0.984 x 0.551 *25x14*	3.937 *100*	GE-B2
	300 *50*	7007 *9500*	F30	13.78 *350*	11.73 *298*	9.06 *230*	3.543 *90*	0.197 *5*	1.496 *38*	8-Φ0.866 *8-Φ22*	4.724 *120*	0.984 x 0.551 *25x14*	3.937 *100*	GE-B3
	600 *100*	14014 *19000*	F35	16.34 *415*	14.02 *356*	10.24 *260*	3.937 *100*	0.197 *5*	1.575 *40*	8-Φ1.299 *8-Φ33*	5.512 *140*	1.102 x 0.63 *28x16*	4.409 *112*	GE-B5
	900 *150*	22864 *31000*	F40	18.7 *475*	15.98 *406*	11.81 *300*	4.724 *120*	0.315 *8*	1.772 *45*	8-Φ1.535 *8-Φ39*	6.299 *160*	1.26 x 0.709 *32x18*	5.276 *134*	GE-B6
	1500 *250*	35624 *48300*	F48	22.05 *560*	19.02 *483*	14.57 *370*	5.512 *140*	0.315 *8*	1.772 *45*	12-Φ1.535 *12-Φ39*	6.693 *170*	1.417 x 0.787 *36x20*	6.142 *156*	GE-B7
24 *600*	150 *20*	5900 *8000*	F35	16.34 *415*	14.02 *356*	10.24 *260*	3.937 *100*	0.197 *5*	1.575 *40*	8-Φ1.299 *8-Φ33*	5.512 *140*	1.102 x 0.63 *28x16*	4.409 *112*	GE-B4
	300 *50*	12907 *17500*	F35	16.34 *415*	14.02 *356*	10.24 *260*	3.937 *100*	0.197 *5*	1.575 *40*	8-Φ1.299 *8-Φ33*	5.512 *140*	1.102 x 0.63 *28x16*	4.409 *112*	GE-B4
	600 *100*	23602 *32000*	F40	18.7 *475*	15.98 *406*	11.81 *300*	4.724 *120*	0.315 *8*	1.772 *45*	8-Φ1.535 *8-Φ39*	6.299 *160*	1.26 x 0.709 *32x18*	5.276 *134*	GE-B6
	900 *150*	36878 *50000*	F48	22.05 *560*	19.02 *483*	14.57 *370*	5.512 *140*	0.315 *8*	1.772 *45*	12-Φ1.535 *12-Φ39*	6.693 *170*	1.417 x 0.787 *36x20*	6.142 *156*	GE-B7
	1500 *250*	66380 *90000*	F60	27.01 *686*	23.74 *603*	18.5 *470*	6.299 *160*	0.315 *8*	2.362 *60*	20-Φ1.535 *20-Φ39*	7.48 *190*	1.575 x 0.866 *40x22*	7.008 *178*	GE-C7

Note:

(1) Torque doesn't include safety factor. The torque is based on seats of PTFE/RPTFE (Class 150 – 300), Nylon (Class 900 – 1500), and PEEK (Class 2500). Torque shall be as follows if other than the base seat material is selected:

PTFE/RPTFE	Nylon	Devlon	PCTFE	TFM	Delrin	Molon	PPL	PEEK	Metal
Base	x 1	x 1	x 0.8	X 0.8	x 1	X 1	X 0.8	x 1.3	x 2.2

(2) Number of bolt holes and bolt hole diameter.

TOP MOUNTING DIMENSIONS AND TORQUE (CONT'D)

NPS 26-40 (DN 650-1000)

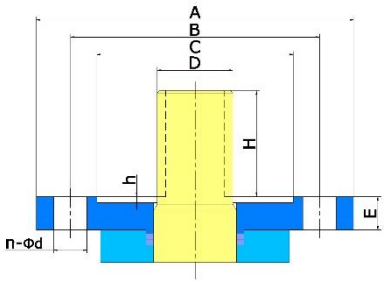

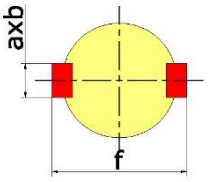

Size *in/mm*	Rating *Class/PN*	Torque[1] *ft-lb/N-m*	ISO F#	A	B	C	D	h	E	n-Φd[2]	H	Drive Key a x b	f	Gearbox Model
26 *650*	150 *20*	6269 *8500*	F35	16.34 *415*	14.02 *356*	10.24 *260*	3.937 *100*	0.197 *5*	1.575 *40*	8-Φ1.299 *8-Φ33*	5.512 *140*	1.102 x 0.63 *28x16*	4.409 *112*	GE-B4
	300 *50*	13276 *18000*	F35	16.34 *415*	14.02 *356*	10.24 *260*	3.937 *100*	0.197 *5*	1.575 *40*	8-Φ1.299 *8-Φ33*	5.512 *140*	1.102 x 0.63 *28x16*	4.409 *112*	GE-B5
	600 *100*	25077 *34000*	F40	18.7 *475*	15.98 *406*	11.81 *300*	4.724 *120*	0.315 *8*	1.772 *45*	8-Φ1.535 *8-Φ39*	6.299 *160*	1.26 x 0.709 *32x18*	5.276 *134*	GE-B6
	900 *150*	42041 *57000*	F48	22.05 *560*	19.02 *483*	14.57 *370*	5.512 *140*	0.315 *8*	1.772 *45*	12-Φ1.535 *12-Φ39*	6.693 *170*	1.417 x 0.787 *36x20*	6.142 *156*	GE-B7
28 *700*	150 *20*	6638 *9000*	F35	16.34 *415*	14.02 *356*	10.24 *260*	3.937 *100*	0.197 *5*	1.575 *40*	8-Φ1.299 *8-Φ33*	5.512 *140*	1.102 x 0.63 *28x16*	4.409 *112*	GE-B4
	300 *50*	16226 *22000*	F35	16.34 *415*	14.02 *356*	10.24 *260*	3.937 *100*	0.197 *5*	1.575 *40*	8-Φ1.299 *8-Φ33*	5.512 *140*	1.102 x 0.63 *28x16*	4.409 *112*	GE-B5
	600 *100*	30978 *42000*	F48	22.05 *560*	19.02 *483*	14.57 *370*	5.512 *140*	0.315 *8*	1.772 *45*	12-Φ1.535 *12-Φ39*	6.693 *170*	1.417 x 0.787 *36x20*	6.142 *156*	GE-B7
	900 *150*	46465 *63000*	F48	22.05 *560*	19.02 *483*	14.57 *370*	5.512 *140*	0.315 *8*	1.772 *45*	12-Φ1.535 *12-Φ39*	6.693 *170*	1.417 x 0.787 *36x20*	6.142 *156*	GE-B7
30 *750*	150 *20*	8851 *12000*	F35	16.34 *415*	14.02 *356*	10.24 *260*	3.937 *100*	0.197 *5*	1.575 *40*	8-Φ1.299 *8-Φ33*	5.512 *140*	1.102 x 0.63 *28x16*	4.409 *112*	GE-B4
	300 *50*	19914 *27000*	F40	18.7 *475*	15.98 *406*	11.81 *300*	4.724 *120*	0.315 *8*	1.772 *45*	8-Φ1.535 *8-Φ39*	6.299 *160*	1.26 x 0.709 *32x18*	5.276 *134*	GE-B6
	600 *100*	37616 *51000*	F48	22.05 *560*	19.02 *483*	14.57 *370*	5.512 *140*	0.315 *8*	1.772 *45*	12-Φ1.535 *12-Φ39*	6.693 *170*	1.417 x 0.787 *36x20*	6.142 *156*	GE-C5
	900 *150*	55317 *75000*	F48	22.05 *560*	19.02 *483*	14.57 *370*	6.299 *160*	0.315 *8*	1.969 *50*	12-Φ1.535 *12-Φ39*	7.48 *190*	1.575 x 0.866 *40x22*	7.008 *178*	GE-B7
32 *800*	150 *20*	9957 *13500*	F35	16.34 *415*	14.02 *356*	10.24 *260*	4.724 *120*	0.197 *5*	1.575 *40*	8-Φ1.299 *8-Φ33*	6.299 *160*	1.26 x 0.709 *32x18*	5.276 *134*	GE-B5
	300 *50*	22864 *31000*	F40	18.7 *475*	15.98 *406*	11.81 *300*	4.724 *120*	0.315 *8*	1.772 *45*	8-Φ1.535 *8-Φ39*	6.299 *160*	1.26 x 0.709 *32x18*	5.276 *134*	GE-B6
	600 *100*	44254 *60000*	F48	22.05 *560*	19.02 *483*	14.57 *370*	5.512 *140*	0.315 *8*	1.772 *45*	12-Φ1.535 *12-Φ39*	6.693 *170*	1.417 x 0.787 *36x20*	6.142 *156*	GE-C5
34 *850*	150 *20*	11432 *15500*	F35	16.34 *415*	14.02 *356*	10.24 *260*	4.724 *120*	0.197 *5*	1.575 *40*	8-Φ1.299 *8-Φ33*	6.299 *160*	1.26 x 0.709 *32x18*	5.276 *134*	GE-B5
	300 *50*	26921 *36500*	F40	18.7 *475*	15.98 *406*	11.81 *300*	5.512 *140*	0.315 *8*	1.772 *45*	8-Φ1.535 *8-Φ39*	6.693 *170*	1.417 x 0.787 *36x20*	6.142 *156*	GE-B6
	600 *100*	51629 *70000*	F48	22.05 *560*	19.02 *483*	14.57 *370*	6.299 *160*	0.315 *8*	1.969 *50*	12-Φ1.535 *12-Φ39*	7.48 *190*	1.575 x 0.866 *40x22*	7.008 *178*	GE-B7
36 *900*	150 *20*	12539 *17000*	F35	16.34 *415*	14.02 *356*	10.24 *260*	4.724 *120*	0.197 *5*	1.575 *40*	8-Φ1.299 *8-Φ33*	6.299 *160*	1.26 x 0.709 *32x18*	5.276 *134*	GE-B5
	300 *50*	28765 *39000*	F40	18.7 *475*	15.98 *406*	11.81 *300*	5.512 *140*	0.315 *8*	1.772 *45*	8-Φ1.535 *8-Φ39*	6.693 *170*	1.417 x 0.787 *36x20*	6.142 *156*	GE-B6
	600 *100*	56055 *76000*	F48	22.05 *560*	19.02 *483*	14.57 *370*	6.299 *160*	0.315 *8*	1.969 *50*	12-Φ1.535 *12-Φ39*	7.48 *190*	1.575 x 0.866 *40x22*	7.008 *178*	GE-B7
40 *1000*	150 *20*	18439 *25000*	F40	18.7 *475*	15.98 *406*	11.81 *300*	7.724 *120*	0.315 *8*	1.772 *45*	8-Φ1.535 *8-Φ39*	6.299 *160*	1.26 x 0.709 *32x18*	5.276 *134*	GE-B6
	300 *50*	36878 *50000*	F48	22.05 *560*	19.02 *483*	14.57 *370*	5.512 *140*	0.315 *8*	1.969 *50*	12-Φ1.535 *12-Φ39*	6.693 *170*	1.417 x 0.787 *36x20*	6.142 *156*	GE-C5
	600 *100*	66380 *90000*	F60	27.01 *686*	23.74 *603*	18.5 *470*	6.299 *160*	0.315 *8*	2.362 *60*	20-Φ1.535 *20-Φ39*	7.48 *190*	1.575 x 0.866 *40x22*	7.008 *178*	GE-C7

Note:

(1) Torque doesn't include safety factor. The torque is based on seats of PTFE/RPTFE (Class 150 – 300), Nylon (Class 900 – 1500), and PEEK (Class 2500). Torque shall be as follows if other than the base seat material is selected:

PTFE/RPTFE	Nylon	Devlon	PCTFE	TFM	Delrin	Molon	PPL	PEEK	Metal
Base	x 1	x 1	x 0.8	X 0.8	x 1	X 1	X 0.8	x 1.3	x 2.2

(2) Number of bolt holes and bolt hole diameter.

TOP MOUNTING DIMENSIONS AND TORQUE (CONT'D) NPS 42-56 (DN 1050-1400)

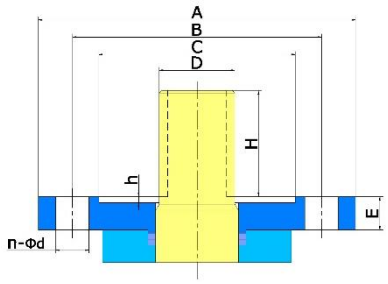

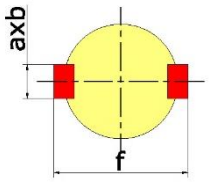

Size *in/mm*	Rating *Class/PN*	Torque[1] *ft-lb/N-m*	ISO F#	A	B	C	D	h	E	n-Φd[2]	H	Drive Key a x b	f	Gearbox Model
42 *1050*	150 *20*	20652 *28000*	F40	18.7 *475*	15.98 *406*	11.81 *300*	4.724 *120*	0.315 *8*	1.772 *45*	8-Φ1.535 *8-Φ39*	6.299 *160*	1.26 x 0.709 *32x18*	5.276 *134*	GE-B6
	300 *50*	40566 *55000*	F48	22.05 *560*	19.02 *483*	14.57 *370*	5.512 *140*	0.315 *8*	1.969 *50*	12-Φ1.535 *12-Φ39*	6.693 *170*	1.417 x 0.787 *36x20*	6.142 *156*	GE-B7
	600 *100*	81132 *110000*	F60	27.01 *686*	23.74 *603*	18.5 *470*	6.299 *160*	0.315 *8*	2.362 *60*	20-Φ1.535 *20-Φ39*	7.48 *190*	1.575 x 0.866 *40x22*	7.008 *178*	GE-C7
48 *1200*	150 *20*	33190 *45000*	F40	18.7 *475*	15.98 *406*	11.81 *300*	5.512 *140*	0.315 *8*	1.772 *45*	8-Φ1.535 *8-Φ39*	6.693 *170*	1.417 x 0.787 *36x20*	6.142 *156*	GE-C5
	300 *50*	66380 *90000*	F60	27.01 *686*	23.74 *603*	18.5 *470*	6.299 *160*	0.315 *8*	2.362 *60*	20-Φ1.535 *20-Φ39*	7.48 *190*	1.575 x 0.866 *40x22*	7.008 *178*	GE-C7
	600 *100*	125385 *170000*	F60	27.01 *686*	23.74 *603*	18.5 *470*	7.874 *200*	0.315 *8*	2.362 *60*	20-Φ1.535 *20-Φ39*	9.25 *235*	1.772 x 0.984 *45x25*	8.661 *220*	(3)
56 *1400*	150 *20*	40566 *55000*	F48	22.05 *560*	19.02 *483*	14.57 *370*	6.299 *160*	0.315 *8*	1.969 *50*	12-Φ1.535 *12-Φ39*	7.48 *190*	1.575 x 0.866 *40x22*	7.008 *178*	GE-B7
	300 *50*	92195 *125000*	F60	27.01 *686*	23.74 *603*	18.5 *470*	7.087 *180*	0.315 *8*	2.165 *55*	20-Φ1.535 *20-Φ39*	8.661 *220*	1.772 x 0.984 *45x25*	7.874 *200*	GE-C7
	600 *100*	177014 *240000*	F60	27.01 *686*	23.74 *603*	18.5 *470*	7.874 *200*	0.315 *8*	2.362 *60*	20-Φ1.535 *20-Φ39*	9.252 *235*	1.772 x 0.984 *45x25*	8.661 *220*	(3)

Note:
(1) Torque doesn't include safety factor. The torque is based on seats of PTFE/RPTFE (Class 150 – 300), Nylon (Class 900 – 1500), and PEEK (Class 2500). Torque shall be as follows if other than the base seat material is selected:

PTFE/RPTFE	Nylon	Devlon	PCTFE	TFM	Delrin	Molon	PPL	PEEK	Metal
Base	x 1	x 1	x 0.8	X 0.8	x 1	X 1	X 0.8	x 1.3	x 2.2

(2) Number of bolt holes and bolt hole diameter.
(3) Please consult our sales representative for gearbox selection.

GEAR OPERATORS

DIMENSIONS AND WEIGHTS

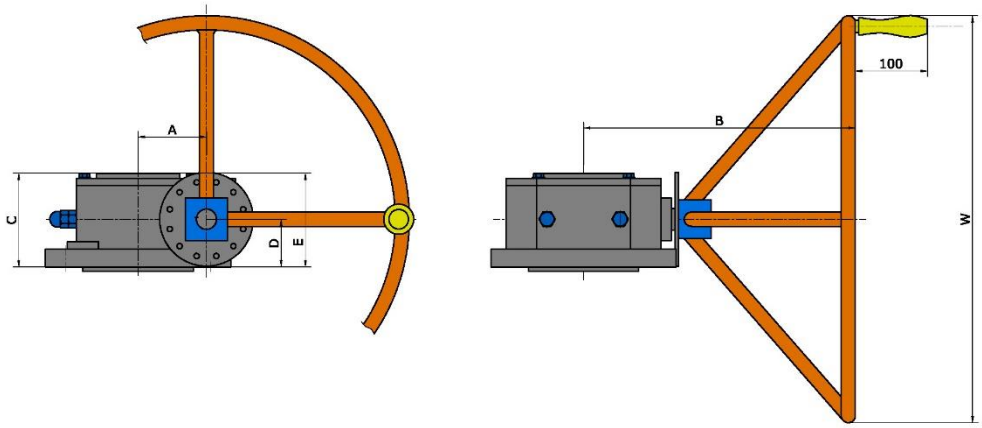

Gearbox Model	ISO F#	A	B	C	D	E	W	Gear Ratio	Weight *lb/kg*	Input Torque *ft-lb/N-m*	Output Torque *ft-lb/N-m*
GE-A1	F10	2.5 *63*	8.4 *214*	2.4 *60*	1.3 *33*	2.8 *72*	13.8 *350*	38:1	18 *8*	59 *80*	406 *550*
GE-A2	F12	3 *75*	8.8 *223*	3 *75*	1.6 *40*	3.4 *87*	13.8 *350*	54:1	24 *11*	66 *90*	701 *950*
GE-A3	F14	3.4 *87*	9.3 *236*	3.5 *90*	2.1 *54*	4.2 *106*	13.8 *350*	50:1	33 *15*	92 *125*	959 *1300*
GE-A4	F16	4.1 *105*	9.3 *236*	3.5 *90*	2.1 *54*	4.2 *106*	13.8 *350*	50:1	37 *17*	92 *125*	959 *1300*
GE-A5	F16	4.1 *105*	12.2 *310*	3.5 *90*	2.1 *54*	4.2 *106*	18.1 *460*	72:1	55 *25*	122 *165*	1623 *2200*
GE-A6	F16	4.1 *105*	14.8 *375*	3.7 *95*	2.1 *54*	4.4 *112*	23.6 *600*	68:1	88 *40*	144 *195*	2360 *3200*
GE-A7	F25	5.9 *150*	14.8 *375*	3.7 *95*	2.1 *54*	4.4 *112*	23.6 *600*	68:1	106 *48*	144 *195*	2360 *3200*
GE-A8	F25	5.9 *150*	16.9 *430*	5.3 *135*	7.1 *180*	6 *153*	23.6 *600*	85:1	179 *81*	144 *195*	3098 *4200*
GE-A9	F25	5.9 *150*	20.1 *510*	5.3 *135*	7.1 *180*	6 *153*	23.6 *600*	200:1	198 *90*	144 *195*	5310 *7200*
GE-B1	F25	6.1 *155*	20.9 *532*	5.5 *140*	3 *77*	6.5 *166*	23.6 *600*	275:1	229 *104*	144 *195*	7449 *10100*
GE-B2	F30	6.1 *155*	20.9 *532*	5.5 *140*	3 *77*	6.5 *166*	23.6 *600*	275:1	229 *104*	144 *195*	7449 *10100*
GE-B3	F30	6.8 *172*	21.9 *557*	5.7 *145*	2.9 *74*	6.6 *168*	23.6 *600*	433:1	278 *126*	144 *195*	10695 *14500*
GE-B4	F35	8.1 *207*	22.8 *579*	6.5 *165*	3.3 *84*	7.5 *190*	23.6 *600*	518:1	348 *158*	144 *195*	13719 *18600*
GE-B5	F35	8.3 *212*	25.2 *641*	6.5 *165*	3.4 *87*	7.2 *183*	23.6 *600*	664:1	459 *208*	144 *195*	18070 *24500*
GE-B6	F40	10.4 *265*	29.3 *744*	8.1 *205*	4.3 *109*	8.9 *225*	23.6 *600*	1281:1	725 *329*	144 *195*	31346 *42500*
GE-B7	F48	11 *280*	33.3 *847*	8.9 *225*	4.8 *122*	9.7 *247*	27.6 *700*	1840:1	1213 *550*	177 *240*	62471 *84700*
GE-C1	F30	7.2 *183*	26.8 *680*	5.3 *135*	2.7 *68*	6 *152*	15.7 *400*	372:1	311 *141*	144 *195*	11063 *15000*
GE-C2	F30	7.2 *183*	28.7 *728*	5.3 *135*	2.7 *68*	6 *152*	15.7 *400*	955:1	322 *146*	92 *125*	16226 *22000*
GE-C3	F35	8.5 *216*	28.4 *721*	5.9 *150*	2.3 *82*	7.3 *185*	19.7 *500*	402;1	573 *260*	162x2 *220x2*(1)	327450 *37000*
GE-C4	F35	8.5 *216*	29.1 *738*	5.9 *150*	2.3 *82*	7.3 *185*	19.7 *500*	1032:1	423 *192*	162 *220*	30978 *42000*
GE-C5	F40	9.7 *247*	30.2 *768*	7.1 *180*	3.6 *91*	8 *203*	23.6 *600*	1232:1	529 *240*	162 *220*	38353 *52000*
GE-C6	F48	11.5 *292*	35.4 *898*	7.7 *195*	4.1 *103*	8.9 *226*	27.6 *700*	838:1	893 *405*	207x2 *280x2*(1)	62693 *85000*
GE-C7	F60	14.2 *360*	40.1 *1018*	10.2 *260*	5.3 *135*	11.9 *303*	35.4 *900*	1560:1	2555 *1159*	207x2 *280x2*(1)	118010 *160000*

Note:
(1) Requires 2 persons to operate.

Engineered Solutions ®

SEAT AND SEAL MATERIAL

SELECTION GUIDE

Seat Material Pressure-Temperature Rating (Operating)

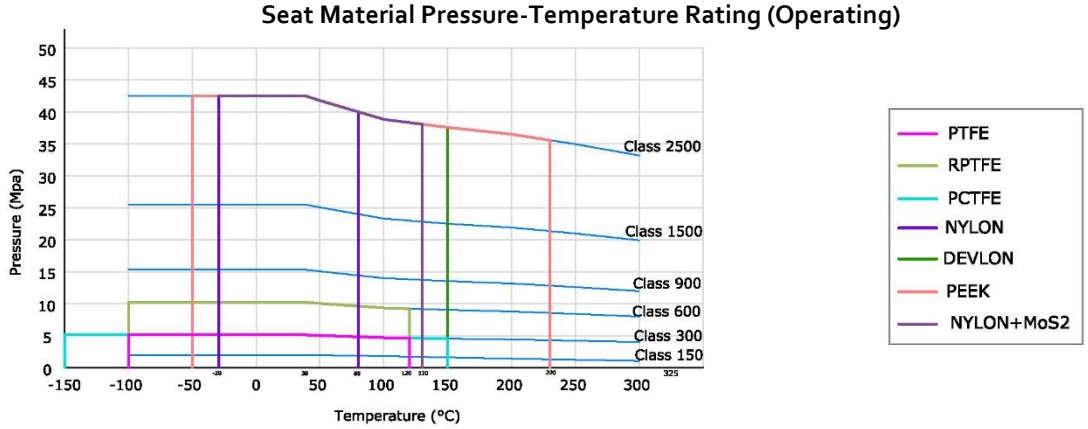

SEAT MATERIALS

Material Name	Description	Operating Temperature	Operating Pressure	Service Application
PTFE	Virgin PTFE is the most widely used sealing material with excellent characteristics suitable for most services. It has excellent chemical resistance throughout valve industries and low coefficient of frication.	-112°F – 248°F *-80°C– 120°C*	Class 150 *PN 20*	General chemicals, low pressure services.
RPTFE	RPTFE (Reinforced PTFE) is typically produced by adding 15% fiber glass to virgin PTFE. It has better pressure-temperature properties than virgin PTFE, better resistance to wear and deformation under load. **NOT to be used in hydrofluroic acid**	-112°F – 248°F *-80°C– 120°C*	Class 150 – 600 *PN 20 – 100*	For low and medium pressure services.
PCTFE	PCTFE is a homopolymer of chlorotrifluoroethylene, featuring high compressive strength and low deformation under load.	-320°F – 248°F -196°C– 120°C	Class 150 – 300 PN 20 – 50	For low temperature low pressure services.
Nylon 6	Nylon is a common seat material for Class 600 valves. It is highly resistance to many chemicals and abrasions, and can be used in air, oil and other gas media. **It is NOT suitable for strong oxidization agents.**	-22°F – 176°F *-30°C– 80°C*	Class 150 –1500 *PN 20 –250*	For high pressure, low temperature services.
Devlon®	Devlon® is a high molecular weight polyamide that is specifically tailored for high temperature/pressure applications in the offshore oil and gas sector.It is low moisture absorption.	-50°F – 302°F *-46°C– 150°C*	Class 150 –1500 *PN 20 –250*	For high pressure high temperature offshore services.
Nylon+MoS2	Molon (Nylon+MoS2) is a modified Nylon, the characteristics are similar to Devlon with it is cheaper than Devlon.	-20°F – 266°F *-29°C– 130°C*	Class 150 – 1500 *PN 20 – 250*	For high pressure, low temperature services.
PEEK	PEEK is a high performance engineered thermoplastic. It is excellent in water/chemical resistance andit is unaffected by continuous exposure to hot water/steam	-148°F – 500°F *-100°C– 260°C*	Class 150 – 2500 *PN 20 – 420*	For high pressure high temperature services.
PPL	PPL (Polyparaphenylene) is an excellent seat material with low coefficient of friction, highly resistant to pressure and temperature.	-50°F –482°F *-46°C– 250°C*	Class 150 – 300 *PN 20 – 50*	For high temperature low pressure services.
Delrin®	Delrin® (Acetal Resin) possesses high tensile strength, creep resistance and toughness. It exhibits low moisture absorption. It is chemically resistant to hydrocarbons, solvents and neutral chemicals.**DO NOT use it on oxygen service or steam.**	-50°F –194°F *-46°C– 90°C*	Class 150 – 600 *PN 20 –100*	For extreme pressure services.
TFM	TFM (modified PTFE) is a chemically modified PTFE that offers enhanced properties while retaining all the proven advantages of a conventional PTFE.	-112°F – 248°F *-80°C– 120°C*	Class 150 *PN 20*	For services requiring high purity.
Metal	Metal (typically stellite) seats are used in severe conditions where flashing, hydraulic shock, abrasive media or trapped metal may exist in the line.	Varies	Varies	For severe services.

O-RING MATERIALS

Material Name	Description	Operating Temperature	Operating Pressure
NBR	Buna-N (NBR) is an all purpose polymer with good resistance to water, solvents, oil and hydraulic fluids.	-50°F –176°F *-46°C– 80°C*	Class 150 – 600 *PN 20 –100*
HNBR	HNBR (Hydrogenated NBR) has similar media stability to NBR but with significantly better heat and oxidization stability.	-67°F – 337°F *-55°C–170°C*	Class 150 – 600 *PN 20 – 100*
Viton	Viton (fluorocarbon) is a fluorocarbon elastomer that is compatible with a broad range of chemicals. It performs well in mineral acids, salt solutions, chlorinated hydrocarbons and petroleum oils	-49°F – 320°F *-22°C– 204°C*	Class 150 – 600 *PN 20 – 100*
EPDM	EPDM has good abrasion and tear resistance with excellent chemical resistance to a variety of acids and alkalines. It is susceptible to attack by oil, strong acids and strong alkalines and should not be used in compressed air lines.	-50°F – 302°F *-46°C– 150°C*	Class 150 – 600 *PN 20 – 100*
FVMQ	Fluorosilcione is a silicone polymer chain with fluorinated side-chains for improved oil and fuel resistance. The mechanical and physical properties are very similar to those of silicone.	-50°F – 320°F *-46°C– 177°C*	Class 150 – 600 *PN 20 – 100*
AFLAS®	AFLAS® is highly resistant to a wide range of chemicals	-49°F – 428°F *-29°C– 220°C*	Class 150 – 600 *PN 20 – 100*

FLOW COEFFICENT

SPECIFICATION TABLE

Nominal Size *in/mm*	Class 150 PN 20		Class 300 PN 50		Class 600 PN 100		Class 900 PN 150		Class 1500 PN 250	
	Cv	Kv	Cv	Kv	Cv	Kv	Cv	Kv	Cv	Kv
½ *15*	25	21	25	18	20	17	16	14	16	14
¾ *20*	56	48	56	40	4	3	34	29	34	29
1 *25*	95	81	95	69	64	54	55	47	55	47
1 ½ *40*	308	262	308	223	308	262	165	140	165	140
2 *50*	500	425	430	361	370	315	320	272	320	272
3 *80*	1,360	1,156	1,100	983	1,020	867	920	782	820	697
4 *100*	2,500	2,125	2,000	1,806	1,850	1,573	1,760	1,496	1,600	1,360
6 *150*	4,060	3,451	4,056	2,933	3,410	2,899	4,300	3,655	4,150	3,528
8 *200*	8,090	6,877	7,700	5,845	6,730	5,721	8,475	7,204	8,010	6,809
10 *250*	13,510	11,484	13,090	9,761	11,120	9,452	14,160	12,036	13,220	11,237
12 *300*	20,440	17,374	19,830	14,768	17,440	14,824	21,200	18,020	18,800	15,980
14 *350*	25,050	21,293	23,770	18,099	22,010	18,709	26,700	22,695	24,180	20,553
16 *400*	34,200	29,070	32,595	24,710	29,980	25,483	36,600	31,110	33,150	28,178
18 *450*	44,430	37,766	43,200	32,101	39,520	33,592	49,000	41,650	45,703	38,848
20 *500*	57,665	49,015	55,380	41,663	50,450	42,883	64,600	54,910	60,750	51,638
22 *550*	70,080	59,568	70,080	50,633	68,900	58,565				
24 *600*	87,680	74,528	84,720	63,349	76,630	65,136				
28 *700*	120,000	102,000	115,350	86,700	107,510	91,384				
30 *750*	141,850	120,573	136,600	102,487	125,630	106,786				
32 *800*	160,390	136,332	152,200	115,882	140,900	119,765				
36 *900*	205,450	174,633	192,995	148,438	239,160	203,286				
40 *1000*	248,700	211,395	248,700	179,686	239,160	203,286				
42 *1050*	275,260	233,971	275,260	198,875	275,260	233,971				
48 *1200*	364,180	309,553	364,180	263,120	364,180	309,553				
56 *1400*	529,430	450,016	529,430	382,513	520,500	442,425				

CALCULATION OF FLOW COEFFICIENT

Flow coefficient Cv (Kv is the metric equivalent) is the rate of flow in gallon per minute with the pressure drop of 1psi across the valve. The flow coefficients shown in the above table are determined with equations as follows:

For liquids:

$$Q_l = C_v(\Delta P/SG)^{1/2}$$

Where:
Q_l = Flow of liquid (gallon/minute)
ΔP = Pressure drop in psi (P_1-P_2)
SG = Specific gravity (1 for liquid)

For gases (non-critical):

$$Q_g = 61 \cdot C_v(P_2 \cdot P_1 \,/\, SG)^{1/2}$$

Where:
Q_g = Flow of gases (SFH at STP)
P_2 = Outlet pressure (psi)
P_1 = Inlet pressure (psi)
SG = Specific gravity (1 for gas)

TRUNNION BALL VALVE

VALVE FIGURE NUMBER — *HOW TO ORDER*

	Nominal Size	Valve Type	Pressure Rating	End Conn.	Construct-ion	Body Material	Trim Material	Seat or Insert	O-ring	Operation Mode
	A	B	C	D	E	F	G	H	I	J
e.g.	1 6	B A	6	R	4	C 1	1 0	N	1	G

is a NPS 16 Class 600 trunnion ball valve, RF flanged, 3-piece split body, A105 body, SS316 trim, Nylon seat insert, Viton O-ring, gear operated.

A Nominal Size

00	Modified	**02**	2 (DN 50)	**07**	8 RB	**19**	20 RB	**31**	32 RB
F1	3/8 (DN 10)	**R2**	2 RB	**08**	8 (DN 200)	**20**	20 (DN 500)	**32**	32 (DN 800)
F2	1/2 (DN 15)	**F6**	2 ½ (DN 65)	**09**	10 RB	**21**	22 RB	**33**	34 RB
0R	1/2 RB	**3R**	2 ½ RB	**10**	10 (DN 250)	**22**	22 (DN 550)	**34**	34 (DN 850)
F3	3/4 (DN 20)	**03**	3 (DN 80)	**11**	12 RB	**23**	24 RB	**35**	36 RB
R0	3/4 RB	**R3**	3 RB	**12**	12 (DN 300	**24**	24 (DN 600)	**36**	36 (DN 900)
01	1 (DN 25)	**04**	4 (DN 100)	**13**	14 RB	**25**	26 RB	**37**	38 RB
R1	1 RB	**R4**	4 RB	**14**	14 (DN 350)	**26**	26 (DN 650)	**38**	38 (DN 950)
F4	1 ¼ (DN 32)	**05**	5 (DN 125)	**15**	16 RB	**27**	28 RB	**39**	40 RB
1R	1 ¼ RB	**R5**	5 RB	**16**	16 (DN 400)	**28**	28 (DN 700)	**40**	40 (DN 1000)
F5	1 ½ (DN 40)	**06**	6 (DN 150)	**17**	18 RB	**29**	30 RB	**41**	42 RB
2R	1 ½ RB	**R6**	6 RB	**18**	18 (DN 450)	**30**	30 (DN 750)	**...**	More as such

B Valve Type

BA	Ball Valve

C Pressure Rating

0	Modified	**7**	Class 2500
1	Class 150	**9**	Class 900
3	Class 300	**8**	Class 800
5	Class 1500	**2**	Class 125
6	Class 600	**4**	Class 400

D End Connection

X	Other	**B**	Butt-Weld (BW)
R	RF Flanged	**S**	Socket-Weld (SW)
J	RTJ Flanged		
F	FF Flanged		
T	Threaded		

E Construction

0	Other
3	2PC Body Trunnion
4	3PC Body Trunnion
6	Welded Body Trunnion

F Body Material

X0	Other	**E7**	A182 F91	**S6**	A351 CF8M	**A1**	B564 N04400(Monel 400）
C1	A105N	**E8**	A217 C12A	**S7**	A182 F316L	**A2**	A494 M-35-1
C2	A216 WCA	**L1**	A350 LF1	**S8**	A351 CF3M	**A3**	B865 N05500(Monel K500）
C4	A216 WCB	**L2**	A352 LCA	**S9**	A182 F347	**A4**	B462 N08020(Alloy 20）
C6	A216 WCC	**L3**	A350 LF2	**S0**	A351 C F8C	**A5**	A351 CN7M(Cast Alloy 20）
M1	A182 F1	**L4**	A352 LC2	**SA**	A182 F317	**A6**	A990 CN3MCU(Cast Alloy 20）
M2	A217 WC1	**L5**	A350 LF3	**SB**	A182 F321	**A7**	B462 N10276 (Hastelloy C276)
M3	A182 F2	**L6**	A352 LC3	**SC**	A182 F304H	**A8**	A494 CW12MW(Cast Hastelloy Alloy C276）
M4	A217 WC4	**L7**	A350 LF5	**SD**	A351 CF10	**B1**	B564 N06625 (Alloy Inconel 625)
M5	A182 F12 CL 2	**L8**	A352 LCB	**SE**	A182 F316H	**B2**	A494 CW6MC(Cast Inconel Alloy 625）
M6	A217 WC5	**L9**	A350 LF6	**SF**	A351 CF10M	**B3**	B564 N08825 (Alloy Inconel 825)
M7	A182 F11 CL 2	**LA**	A350 LF9	**SG**	A182 F304(L) Dual	**B4**	A494 CW5MCUC(Cast Inconel Alloy 825）
M8	A217 WC6	**LB**	A352 LC9	**SH**	A182 F316(L) Dual	**H1**	B62 C83600 Composition Bronze Casting
M9	A182 F22 CL 3	**LD**	A352 LCC	**D1**	A182 F51	**H2**	B148 C95400 Al-Bronze Casting
M0	A217 WC9	**S1**	A182 F304	**D2**	A995 4A	**H3**	B148 C95800 Al-Bronze Casting
E1	A182 F5	**S2**	A351 CF8	**D3**	A182 F53	**H4**	B150 C63000 Al-Bronze Rod, Bar
E2	A217 C5	**S3**	A182 F304L	**D4**	A995 5A	**H5**	B150 C63200 Al-Bronze Rod, Bar
E5	A182 F9	**S4**	A351 CF3	**D5**	A182 F55		
E6	A217 C12	**S5**	A182 F316	**D6**	A995 6A		

VALVE FIGURE NUMBER (CONT'D)

HOW TO ORDER

	Nominal Size		Valve Type		Pressure Rating	End Conn.	Construct-ion	Body Material		Trim Material		Seat or Insert	O-ring	Operation Mode
	A		B		C	D	E	F		G		H	I	J
e.g.	1	6	B	A	6	R	4	C	1	1	0	N	1	G

is a NPS 16 Class 600 trunnion ball valve, RF flanged, 3-piece split body, A105 body, SS316 trim, Nylon seat insert, Viton O-ring, gear operated.

G Trim Material

00	Other
01	F6a/F6a/410
02	304/304/304
09	Monel/Monel/Monel
10	316/316/316
13	Alloy 20/Alloy 20/Alloy 20
19	A105+ENP/A105+ENP/F6a
20	304L/304L/304L
21	316L/316L/316L
22	F321/F321/F321
23	F55/F55/F55
24	F51/F51/F51
25	F53/F53/F53
26	A105+ENP/A105+ENP/F316
27	304+ENP/304+ENP/304+ENP
28	Inconel 625/Inconel 625/F316
29	A105+ENP/A105+ENP/4140+ENP
30	A105+ENP/A105+ENP/A105+ENP
31	316/316/17-4PH
36	LF2+ENP/LF2+ENP/F6a
37	A105+TCC/A105+TCC/17-4PH
38	A105+TCC/A105+TCC/4140+ENP
39	A105+TCC/A105+TCC/F51
40	A105+ENP/A105+ENP/17-4PH
41	A105+Ni60/A105+Ni55/4140+ENP
42	A105+Ni60/A105+Ni60/17-4PH
44	Inconel 625/Inconel 625/Inconel 625
45	316+ENP/316+ENP/F316
46	316+ENP/316+ENP/F316+ENP
47	316+Ni60/316+Ni55/17-4PH
48	316L+Ni60/316L+Ni55/17-4PH
49	316+Ni60/316+Ni55/4140+ENP
50	316L+Ni60/316L+Ni55/4140+ENP

H Seat or Seat Insert

X	Other
T	PTFE
R	RPTFE
P	PCTFE
N	Nylon
D	Devlon
P	PEEK
M	Metal
V	Viton
H	HNBR
E	EPDM

I O-Ring

0	No O-ring
1	Viton
2	Teflon
3	HNBR
4	NBR
5	Special
6	EPDM
7	FVMQ
8	FFKM
9	AFLAS

J Operation

L	Lever
D	Lever w/ locking device
G	Gearbox
F	Gearbox w/ locking device
C	Gear w/chain
B	Bare stem
P	Pneumatic
N	Pneumatic-Hydraulic
E	Electric
Q	Other

HOW THE FIGURE NUMBER SYSTEM WORKS

Introduction. Figure number system uses a code consisting 14 digits of letters and numbers to represent the specification of a valve of certain specification. Among 14 digits, they are separated into 10 groups identified by letters from A to J. Each group represents a parameter of a valve, together they contain almost all the essential parameters of the valve.

Uses. Using the figure number system to generate a code is easy. Under each group, the code is shown on the left while on the right is the meaning of the code. Start by selecting a code from group A, through group J. If the specification of the valve is not listed, select the code for "Other/Modified ". The total length of the figure number shall be exactly 14 digits.

Cautions. It is advised that you have as detailed the specification as possible to generate a figure number, which means eliminating "Other/Modified". If you don't have enough specification or information about the valve you are ordering, or you're not sure how to use the system to generate a figure number, contact one of our sales representatives for help.

Note: FBV reserves the right to make any modifications without notice.

Offshore

Pipeline

Engineered Solutions®

Onshore

Refinery

IMPORTANT NOTICE

- All dimensions in inches not listed in standards are converted from millimeters. Weights in lbs (pounds) are converted from kilograms.
- Data listed in the catalog, including dimensions, weights, specifications and other valve related data are intended to provide general information and guidance only.
- FBV Inc. assumes no responsibility for errors or inadequacy relevant to any information provided in this catalog. Any information provided in this catalog is subject to change without notice.

Engineered Solutions®

CONTACT US

E : sales@fbvalve.com
W: www.fbvalve.com

©FBV Inc. All rights reserved.

FBV INC.(USA)
2121 FM 359 South
Brookshire, Texas 77423 USA
T: +1 832-203-5459

FBV INC.(China)
815 Bihu Industrial Zone
Lishui, Zhejiang 323000
T: +86 (577) 8836-7328

FBV Latam INC.
Obarrio, Calle 54 Este, PH Atrium
Tower, Piso 23, Ofc. 23-08
Ciudad de Panama Panama
T: +507-388-7480

FBV (SEA) PTE LTD.
1 Scotts Road, #24-10,
Shaw Centre
Singapore 228208
T: +65-6681-5772