Operating instructions

Additional languages r-stahl.com

EN

Visual signalling device

Series FL60/3

– Save for future use! –

EN

Contents

1 General information 3
1.1 Manufacturer 3
1.2 About these instructions 3
1.3 Further documents 3
1.4 Conformity with standards and regulations 3
2 Explanation of symbols 4
2.1 Symbols used in these operating instructions 4
2.2 Symbols on the device 4
3 Safety 5
3.1 Intended use 5
3.2 Personnel qualification 6
3.3 Residual risks 6
4 Transport and storage 8
5 Product selection and modification 9
6 Mounting and installation 12
6.1 Mounting/dismounting 12
6.2 Installation 14
7 Commissioning 20
7.1 Commissioning multiple devices 21
7.2 Earthing/protective conductor 22
8 Maintenance, overhaul, repair 22
8.1 Maintenance 22
8.2 Maintenance 22
8.3 Repair 22
9 Returning the device 23
10 Cleaning 23
11 Disposal 23
12 Accessories and spare parts 23
13 Appendix A 24
13.1 Technical data 24
14 Appendix B 28
14.1 Device design 28
14.2 Dimensions/fastening dimensions 29
15 Appendix C 30
15.1 General settings 30
15.2 Light table 31

EN

1 General information

1.1 Manufacturer

R. STAHL Schaltgeräte GmbH
Business Unit Lighting & Signalling
Nordstr. 10
99427 Weimar
Germany

Tel.: +49 3643 4324
Fax: +49 3643 4221-76
Internet: r-stahl.com
E-mail: info@r-stahl.com

R. STAHL Schaltgeräte GmbH

Am Bahnhof 30
74638 Waldenburg
Germany

Tel.: +49 7942 943-0
Fax: +49 7942 943-4333
Internet: r-stahl.com
E-mail: info@r-stahl.com

1.2 About these instructions

- Read these operating instructions, especially the safety notes, carefully before use.
- Observe all other applicable documents (see also chapter 1.3).
- Keep the operating instructions throughout the service life of the device.
- Make the operating instructions accessible to operating and maintenance staff at all times.
- Pass the operating instructions on to each subsequent owner or user of the device.
- Update the operating instructions every time R. STAHL issues an amendment.

ID no.: 292406 / FL6060300220
Publication code: 2024-08-06·BA00·III·en·02

The original instructions are the German edition.
They are legally binding in all legal affairs.

1.3 Further documents

- Data sheet

For documents in other languages, see r-stahl.com.

1.4 Conformity with standards and regulations

For certificates and declaration of conformity, see r-stahl.com.

EN

2 Explanation of symbols

2.1 Symbols used in these operating instructions

Symbol	Meaning
	Handy hint for making work easier
DANGER!	Dangerous situation which can result in fatal or severe injuries causing permanent damage if the safety measures are not complied with.
WARNING!	Dangerous situation which can result in severe injuries if the safety measures are not complied with.
CAUTION!	Dangerous situation which can result in minor injuries if the safety measures are not complied with.
NOTICE!	Dangerous situation which can result in material damage if the safety measures are not complied with.

2.2 Symbols on the device

Symbol	Meaning
CE 17055E00	CE marking according to the current applicable directive.
UK CA 8505 23486E00	UKCA marking according to the currently applicable directive.
Ex 02198E00	Device certified for hazardous areas according to the marking.
11048E00	Safety notes that must always be observed: The corresponding data and/or safety-related instructions contained in the operating instructions must be followed for devices with this symbol!
20690E00	Marking according to WEEE Directive 2012/19/EU

Symbol	Meaning
	Visual signal
	Earth connection
1/2"	1/2" NPT thread
M20	M20 metric thread
M25	M25 metric thread
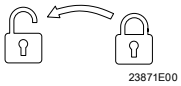 23871E00	Opening/closing the device

3 Safety

The device has been manufactured according to the state of the art of technology while observing recognised safety-related rules. When using the device, it is nevertheless possible for hazards to occur to life and limb of the user or third parties or for the device, environment or material assets to be compromised.

- Use the device only
  - if it is not damaged
  - in accordance with its intended use, taking into account safety and hazards
  - in accordance with these operating instructions

The system operator is responsible for ensuring the safety of the system, device and operating personnel involved. For this purpose, they must observe the relevant national laws, standards and regulations (such as IEC/EN 60079-14, IEC/EN 60079-17 and IEC/EN 60079-19).

3.1 Intended use

The signalling device is intended to provide visual signals in the event of dangerous situations in work areas. It can be used indoors and outdoors and is intended for stationary mounting (wall/pole mounting).
It is explosion-protected equipment approved for use in hazardous areas of Zones 1 and 2, 21 and 22, and in safe areas.
"Intended use" includes complying with these operating instructions and the other applicable documents, e.g. the data sheet. All other uses are only intended after being approved by R. STAHL.

EN

3.2 Personnel qualification

Qualified specialist personnel is required to perform the activities described in these operating instructions. This primarily applies to work in the following areas

- Product selection and modification
- Mounting/dismounting the device
- Installation
- Commissioning
- Maintenance, repair, cleaning

Specialists who perform these activities must have a level of knowledge that meets applicable national standards and regulations.

Additional knowledge is required for any activity in hazardous areas! R. STAHL recommends having a level of knowledge equal to that described in the following standards:

- **IEC/EN 60079-14 (Electrical installations design, selection and erection)**
- **IEC/EN 60079-17 (Electrical installations inspection and maintenance)**
- **IEC/EN 60079-19 (Equipment repair, overhaul and reclamation)**

3.3 Residual risks

3.3.1 Explosion hazard

To reduce the risk in hazardous areas, it is essential to note the following points.

- ▸ Perform all work steps in hazardous areas with the utmost care at all times!
- ▸ Transport, store, plan, mount and operate the device exclusively in compliance with the technical data (see the "Technical data" chapter).

Possible hazards ("residual risks") can be categorized according to the following causes:

Mechanical damage

The device may be damaged during transport, mounting or commissioning. This kind of damage may, for example, render the device's explosion protection partially or completely ineffective. This may result in explosions causing serious or even fatal injury.

- ▸ Transport the device only in its original packaging or in equivalent packaging.
- ▸ Unpack the device carefully to avoid damage.
  Make sure that no parts come loose inside the device.
- ▸ Check the packaging and the device for damage. Report any damage to R. STAHL immediately. Do not commission a damaged device.
- ▸ Transport and store the device in its original packaging in a dry place (with no condensation), and make sure that it is stable and protected against the effects of vibrations and knocks.

Excessive heating or electrostatic charge

Operation outside of approved conditions or improper cleaning can cause the device to heat up severely or to become electrostatically charged, causing it to produce sparks. This may result in explosions causing serious or even fatal injury.

- Operate the device within the prescribed operating conditions only (see the label on the device and the "Technical data" chapter).
- Do not use the device in strong charge-generating environments.
- Avoid friction and flow of particle streams.
- Clean the device with a damp cloth only.

Improper project engineering, mounting, installation, commissioning, maintenance or cleaning

Basic work such as installation, commissioning, maintenance or cleaning of the device must be performed only in accordance with the applicable national regulations of the country of use and only by qualified persons. Otherwise, the explosion protection may be rendered ineffective. This may result in explosions causing serious or even fatal injury.

- Only have mounting, installation, commissioning and maintenance work performed by qualified and authorised persons (see chapter 3.2).
- Prior to commissioning, check the device is correctly mounted (see chapter 7).
- Only fit the device in the permitted assembly position (see chapter 6.1).
- Install mechanical built-in components such as cable glands, stopping plugs and breathers before mounting the signalling device on the ceiling or wall.
- Do not damage the enclosure, built-in components and seals during mounting.
- Observe the tightening torques for cable entries and stopping plugs (see chapter 6).
- Always use safety screws to mount the visual flange and enclosure cover.
- Keep the threads of the flange, cover and enclosure free of dirt and ensure they are always sufficiently greased.
- Do not change or modify the device.
- Repair work on the device must be performed only by R. STAHL.
- Gently clean the device with a damp cloth only – do not use scratching, abrasive or aggressive cleaning agents or solutions.
- Install and commission an uninterruptible power supply (UPS) as auxiliary equipment.

EN

3.3.2 Risk of injury

Falling devices or components
The heavy device or components can fall during transport and mounting, causing severe injury to persons in the form of bruises and contusions.

- Adhere to the operator's safety regulations, e.g. regarding the use of personal protective equipment (safety shoes).
- Use transporting and lifting equipment suitable for the size and weight of the device when transporting and mounting it.
- Observe the weight and the maximum load-bearing capacity of the device; see specifications on the shipping label or refer to the "Technical data" chapter.
- Use suitable mounting materials for mounting.

Insufficient personal protective equipment when in direct contact with the device
Anyone not using personal protective equipment when near the device may be injured due to the visual alarm signals emitted by the device.

- Use personal protective equipment (safety goggles) during mounting, installation, commissioning and maintenance.
- Switch off the device before maintenance or cleaning.

4 Transport and storage

- Transport and store the device carefully and in accordance with the safety notes (see the "Safety" chapter).
- Note the preferred direction; see specifications on the packaging.

EN

5 Product selection and modification

Variants
The following variants of the Series FL60/3 signalling device are available:

Connection chamber:

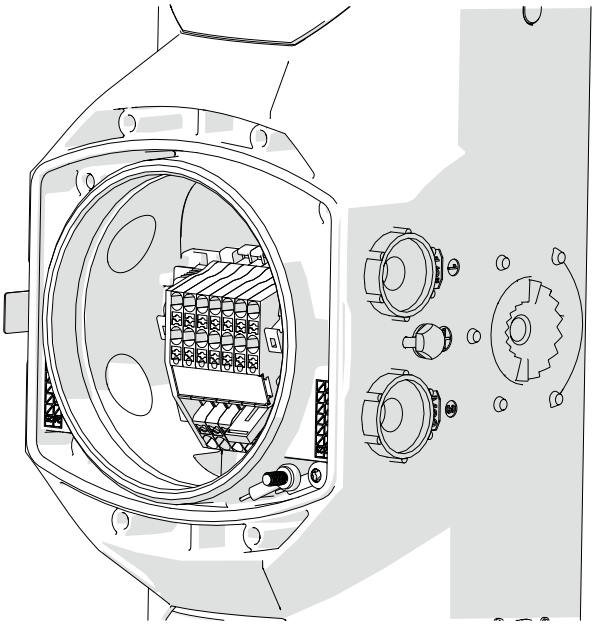

Ex d connection chamber

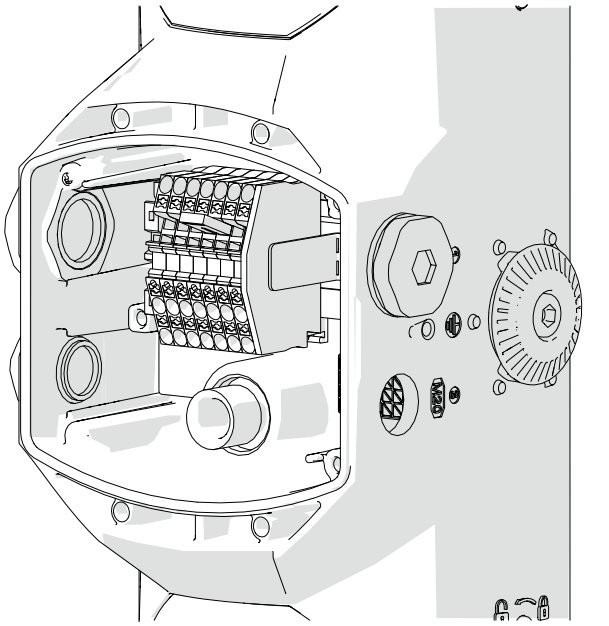

Ex e connection chamber

EN

Connection terminals

Screw terminal
Clamping range:
1 x 0.5 to 2.5 mm^2 (finely stranded with and without core end sleeve)
1 x 0.5 to 4 mm^2 (solid)
(2 spare clamping units are available for each pole)

The two connectional terminals on the neutral conductor/negative potential (DC) are bridged using a plug-in jumper.

Stripping length:
9 mm

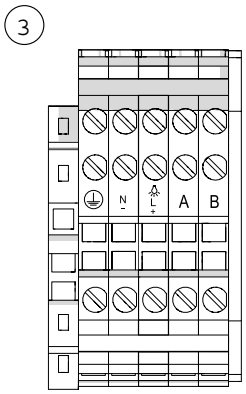

24184E00

N-	= neutral conductor/ negative potential (DC)
L+	= phase/positive potential (DC)
A, B	= control signals
⏚	= protective conductor

Push-in terminal
Clamping range:
1 x 0.5 to 2.5 mm^2 (finely stranded with and without core end sleeve)
1 x 0.5 to 4 mm^2 (solid)
(2 spare clamping units are available for each pole)

The two connectional terminals on the neutral conductor/negative potential (DC) are bridged using a plug-in jumper.

Stripping length:
10 mm

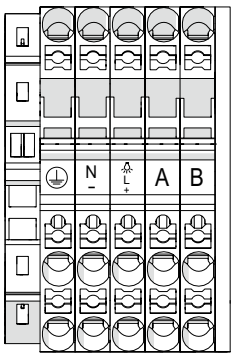

23785E00

N-	= neutral conductor/ negative potential (DC)
L+	= phase/positive potential (DC)
A, B	= control signals
⏚	= protective conductor

The following chapters take only one variant as an example and do not cover all variants.

EN

6 Mounting and installation

6.1 Mounting/dismounting

DANGER! Explosion hazard due to inadequate sealing on metal cable glands!
Non-compliance results in fatal or severe injuries.
- Use a sealing ring (CMP, polyamide) for metal cable glands and Ex d/Ex e enclosures.
- Comply with a tightening torque from 2.2 to 2.5 Nm.
- Observe the manufacturer documentation for the screw connections and stopping plugs.

- Mount the device carefully and only in accordance with the safety notes (see the "Safety" chapter).
- Read through the following installation conditions and assembly instructions carefully and follow them precisely.

6.1.1 Wall mounting

Mounting the L-bracket

When operating the signalling device with increased vibration requirements ("harsh operation", IEC/EN 60598-1), the L-bracket must be used as a retaining element.

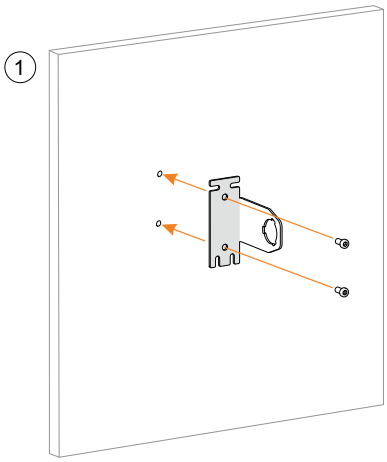

23773E00

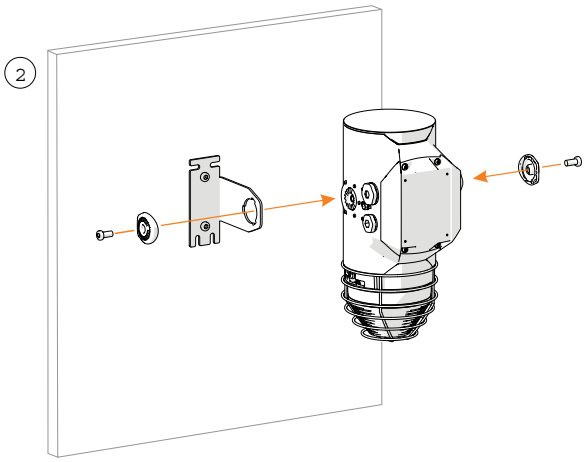

24185E00

- Mount the L-bracket on the wall (1).
- Place the lock in the opening provided.
- Secure the signalling device with the M8 x 16 cheese-head screws (2) provided (tightening torque 8 Nm).
- Fit the locking cover provided on the unused mounting fixture (one increment = 20° angle).

EN

Mounting the U-bracket

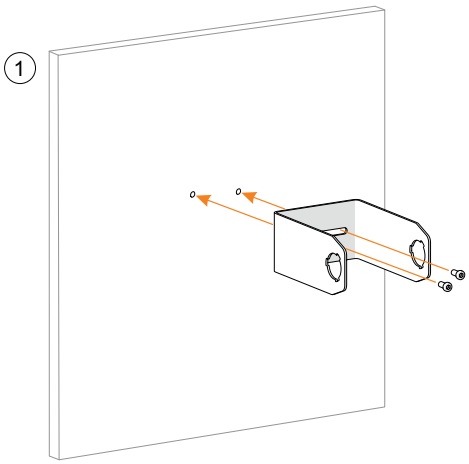

23775E00

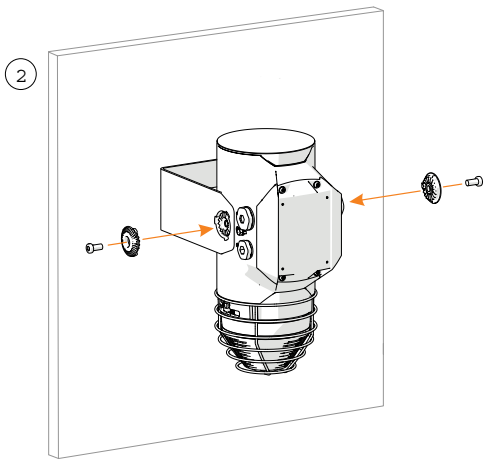

24188E00

- Mount the U-bracket on the wall (1).
- Place the locking cover in the opening provided.
- Secure the signalling device with the M8 x 16 cheese-head screws (2) provided (tightening torque 8 Nm) (one increment = 20° angle).

6.1.2 Dismounting

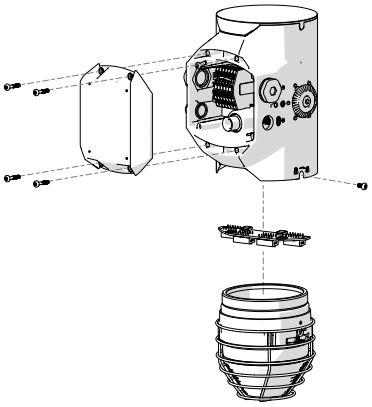

24190E00

- Disconnect the device from the power supply before dismounting.
- Dismantle the device into its component parts, as shown in the figure.

EN

6.2 Installation

6.2.1 Conductor connection

- Select suitable conductors that do not exceed the permissible heating temperature within the enclosure (see the "Technical data" chapter).
- Ensure that conductors have the specified cross sections (see the "Technical data" chapter).
- Guide the conductor insulation to the terminals (for the stripping length, see the "Technical data" chapter).
- Do not damage the conductor (e.g. by denting it) or squeeze it when stripping the insulation.
- Fit the core end sleeves properly using a suitable tool.
- Ensure that the conductors are fitted securely.
- Note the tightening torque for the screw terminal.

6.2.2 Connection and configuration

The device has the following customer-side access points:

1 Connection chamber for wiring/basic configuration
2 Advanced configuration options via configuration PCB

6.2.2.1 Opening the enclosure

For an Ex e connection chamber:

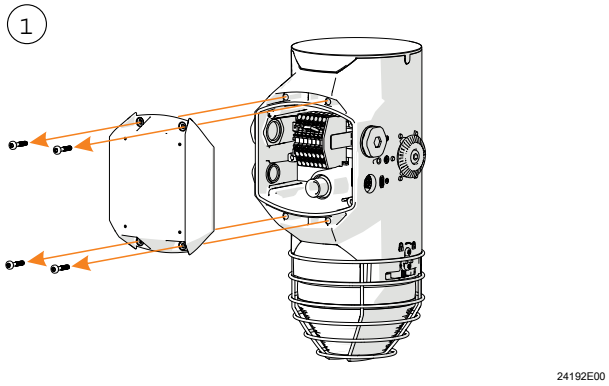

- Undo 4 x TX20 screws (AltracsPlus®) and remove the cover plate.
  The cover plate is secured to the device using a retaining cable.

For an Ex d connection chamber:

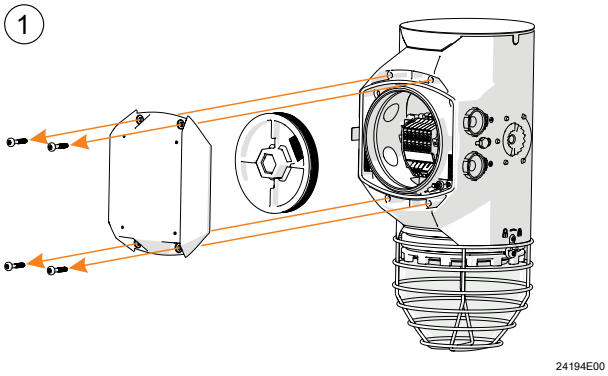

- Undo 4 x TX20 screws (AltracsPlus®) and remove the cover plate.
  The cover plate is secured to the device using a retaining cable.
- Undo the M95 Ex d threaded cover to open the connection chamber.

EN

6.2.2.2 Wiring

For an Ex e connection chamber:

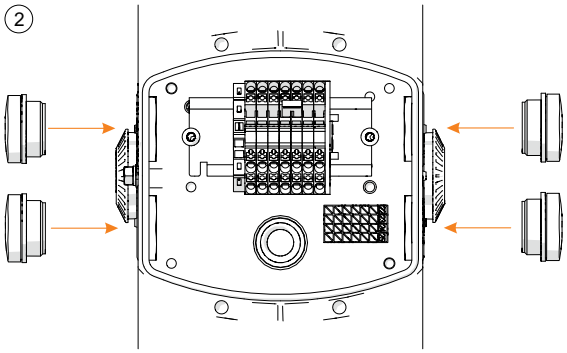

- Screw the cable entries into the drilled holes provided.
  While doing so, comply with the regulations and approvals applicable to the cable entry.
- Screw the stopping plugs supplied into the drilled holes that are not being used.
  While doing so, comply with the regulations and approvals applicable to the stopping plugs.

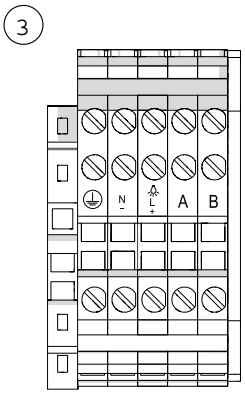

- Connect the conductors to the clamping units provided.

For an Ex d connection chamber:

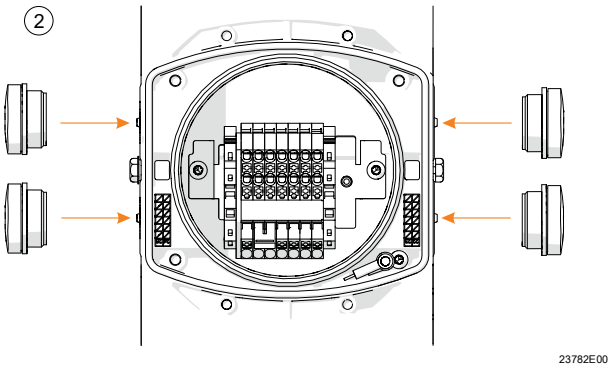

- Screw the cable entries into the drilled holes provided.
  While doing so, comply with the regulations and approvals applicable to the cable entry.
- Screw the stopping plugs supplied into the drilled holes that are not being used.
  While doing so, comply with the regulations and approvals applicable to the stopping plugs.

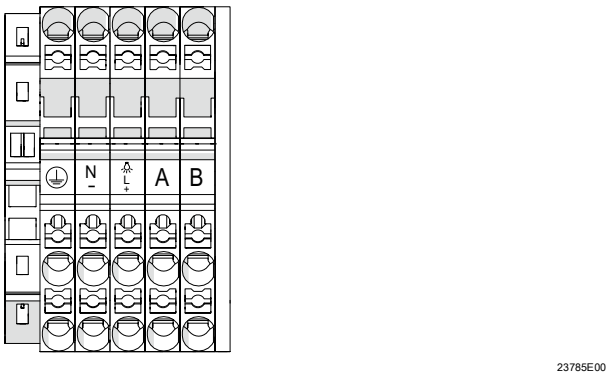

- Connect the conductors to the clamping units provided.

EN

6.2.2.3 Basic configuration

- Use the preconfigured functions (default setting) in the connection area via A/B control signals for static signal adaptation (using the plug-in jumper provided) or dynamic signal adaptation (using separate wiring).

The plug-in jumper can be modified depending on the required configuration setting (individual pins can be disconnected).

The function for switching to visual signals can be activated/deactivated separately (see chapter 6.2.3). Both switching functions are active on delivery.

Visual settings (LED only) (see chapter 15.2 for the light table)		
A	B	
0	0	Continuous light
1	0	Flashing light (double flash, 1 Hz)
0	1	Blinking light (1 Hz)
1	1	Rotating light (120 rpm)

6.2.2.4 Closing the enclosure

For an Ex e connection chamber:

DANGER! Explosion hazard due to a missing or incorrectly attached cover plate!
Non-compliance results in fatal or severe injuries.
- Make sure that the O-ring is present in the groove provided and that it is not damaged.
- Ensure that the cover plate is always flush.

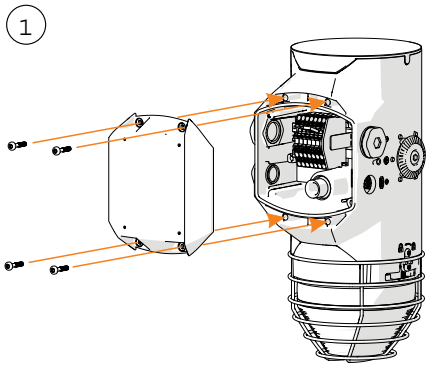

24205E00

- Close the connection chamber using the cover plate and tighten the 4 x TX20 screws (tightening torque 2.2 to 2.5 Nm).

EN

For an Ex d connection chamber:

DANGER! Explosion hazard due to a missing or incorrectly attached M95 threaded cover!

Non-compliance results in fatal or severe injuries.

- Always fit the M95 threaded cover because this is necessary to meet the requirements of the type of protection (tightening torque 8 Nm).

DANGER! Explosion hazard due to a missing or incorrectly attached cover plate!

Non-compliance results in fatal or severe injuries.

- Make sure that the O-ring is present in the groove provided and that it is not damaged.
- Ensure that the cover plate is always flush.

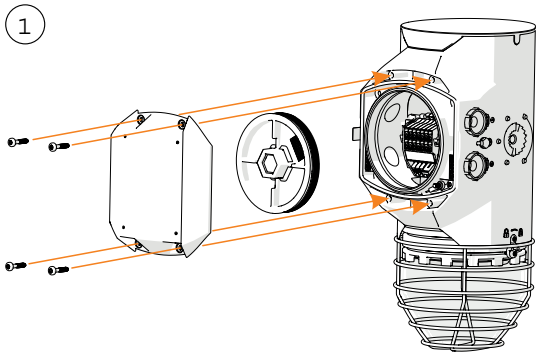

24203E00

- Close the connection chamber using the M95 threaded cover (tightening torque 8 Nm).
- Close the connection chamber using the cover plate and tighten the 4 x TX20 screws (tightening torque 2.2 to 2.5 Nm).

EN

6.2.3 Advanced configuration options (optional – only for LED versions) (see chapter 15.1 for general settings)

6.2.3.1 Opening the enclosure

1

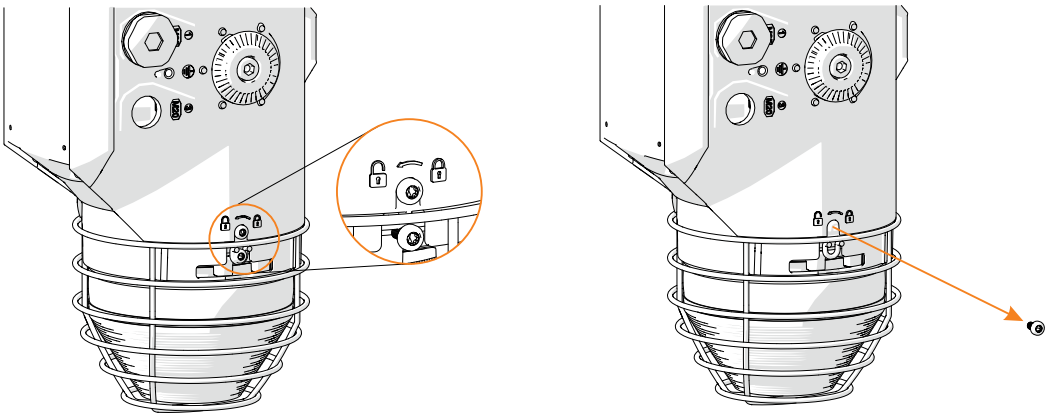

23789E00

- Remove the TX20 safety screw from the flange.
  Note the lock marking while doing so.

2

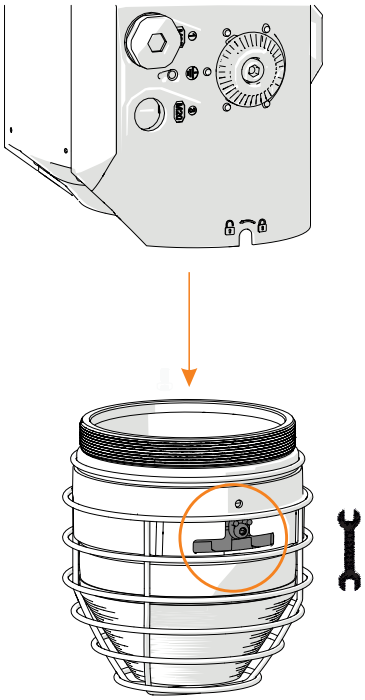

23790E00

3

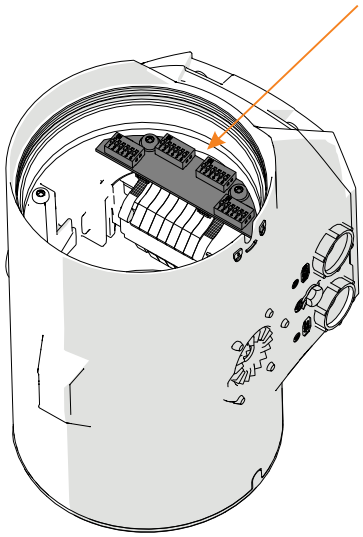

24197E00

- Open the visual flange without dismounting the protective cage.
  You may need to use the WAF10 open-ended spanner as a lever to help you with this (see marking).
  Access to the configuration PCB is enabled.

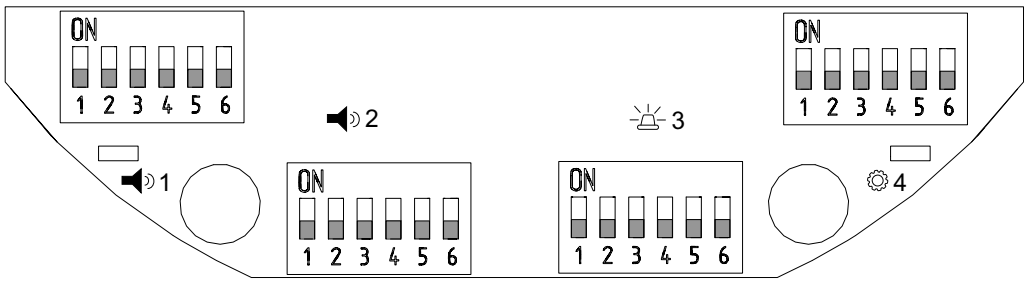

- Configure the DIP switches present according to the necessary requirements.
  Four DIP switches are available for this:
  1. Non-functional
  2. Non-functional
  3. Visual settings (see chapter 15.2 for the light table)
  4. General settings (see chapter 15.1 for general settings)

6.2.3.2 Mounting the visual flange

DANGER! Explosion hazard due to a missing or incorrectly attached enclosure cover!

Non-compliance results in fatal or severe injuries.

- Observe the installation note in the data sheet.
- Make sure that the O-ring is inserted and is not damaged.
- Lock the visual flange fully up to the visible edge.

The configuration PCB is only integrated in LED versions.

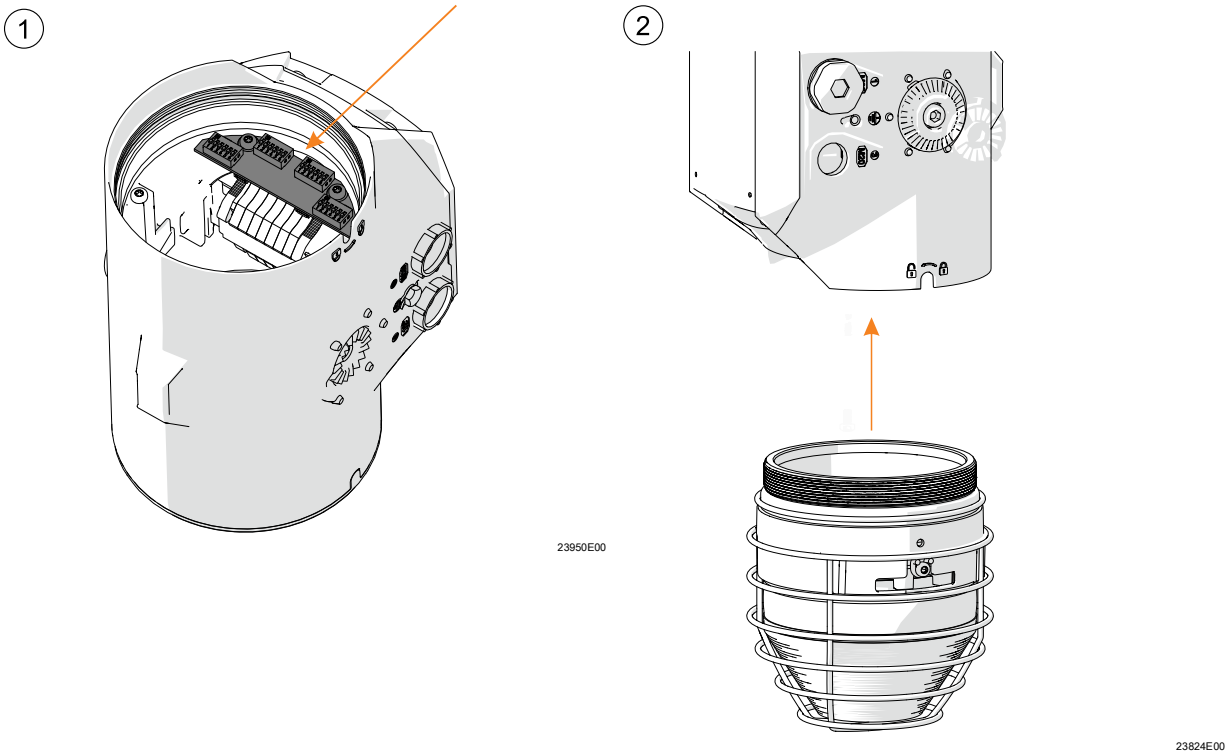

- Place the visual flange on the enclosure and tighten it manually as far as it will go (tightening torque 8 Nm).
  You may need to use the WAF10 open-ended spanner as a lever to help you with this.

EN

3

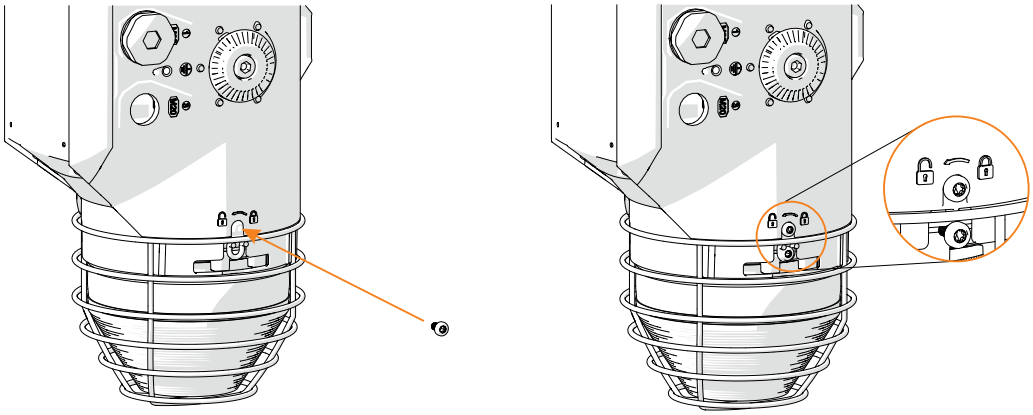

23825E00

- Secure the visual flange with the TX20 safety screw (tightening torque 1.6 Nm).

7 Commissioning

Before commissioning, carry out the following checks:

- Check the mounting and installation.
- Check the device for damage.
- Remove any foreign objects.
- If necessary, clean the connection chamber.
- Monitor whether the electrical lines have been inserted correctly.
- Check whether the conductor are securely fitted using the cable holders provided.
- Monitor whether all screws and nuts have been tightened securely.
- Monitor whether all drilled holes are closed.
- Monitor whether all cable entries and stopping plugs have been tightened securely.
- Check whether all conductors are securely clamped.
- Check whether the line voltage and the rated operational voltage are the same.
- Check whether the permissible cable diameters have been used for the cable entries.
- Check whether the device has been closed according to regulations.
- Put the device into operation according to the applicable national regulations and the safety notes in these operating instructions ("Safety" chapter).

EN

7.1 Commissioning multiple devices

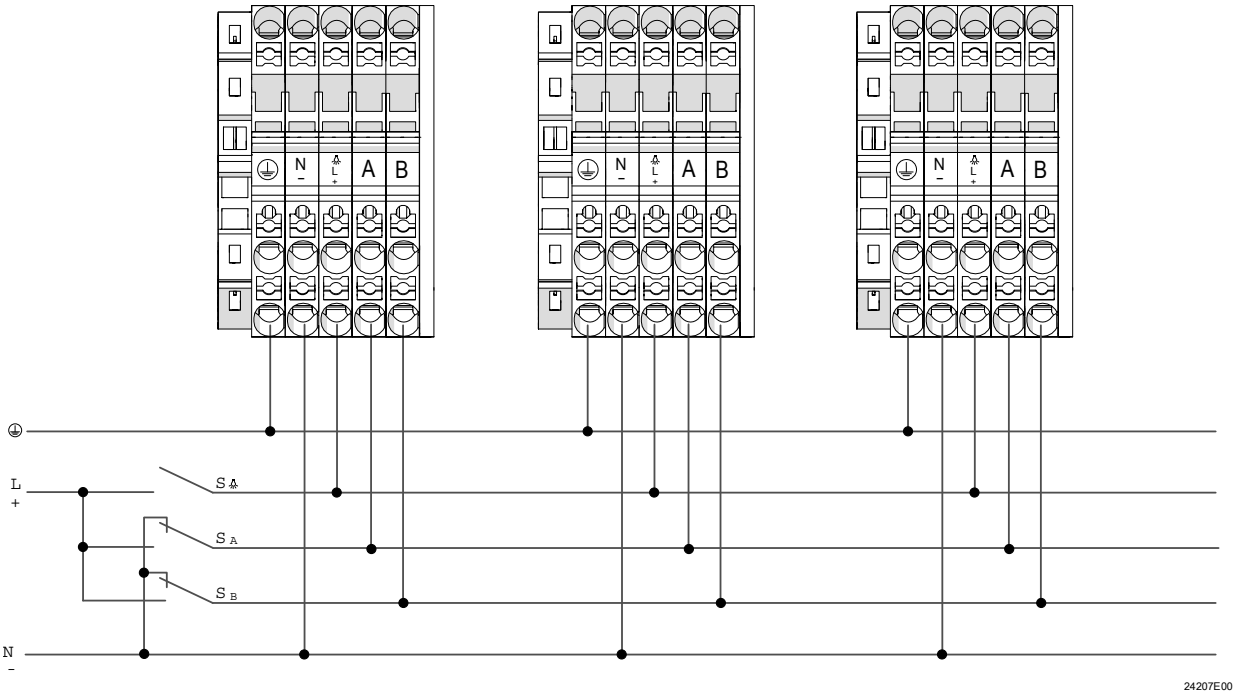

Example: Connection diagram for combining multiple devices

- If electrical conductors are connected to input signals A and/or B, these conductors must always be connected to **a potential.**
  - to the positive potential of the signalling device's input voltage, corresponding to a logic "1"
  - to the negative potential of the signalling device's input voltage, corresponding to a logic "0".

The signalling device has an integrated back-up fuse.

If multiple devices are connected, note the total power.
The ex-factory configuration is set to "maximum" and may need to be adjusted.

EN

7.2 Earthing/protective conductor

- The internal earth connection is the primary connection point. The external connection is an additional equipotential bonding conductor and is used where local code or authorities permit or require such a conductor.

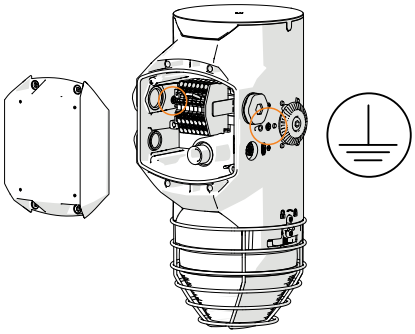

24220E00

8 Maintenance, overhaul, repair

- Observe the relevant national standards and regulations in the country of use, e.g. IEC/EN 60079-14, IEC/EN 60079-17, IEC/EN 60079-19.

8.1 Maintenance

Check the following points in addition to the national regulations:

- Whether the clamping screws holding the electrical lines fit securely
- Whether the device has cracks or other visible signs of damage
- Whether the seal shows signs of ageing or damage (completely replace enclosure components with damaged seal)
- Whether the device is clean inside and out
- Whether the permissible temperatures are complied with (according to EN 60079)
- Whether the cable entry is intact and securely tightened
- Whether the cables and electrical lines show signs of ageing and damage
- Whether the device is used as intended and functions properly

8.2 Maintenance

- Perform overhaul of the device according to the applicable national regulations and the safety notes in these operating instructions ("Safety" chapter).

8.3 Repair

- Repair work on the device must be performed only by R. STAHL.

EN

9 Returning the device

- Only return or package the devices after consulting R. STAHL!
  Contact the responsible representative from R. STAHL.

R. STAHL's customer service is available to handle returns if repair or service is required.

- Contact customer service personally.

or

- Go to the r-stahl.com website.
- Under "Support" > "RMA" > select "RMA-REQUEST".
- Fill out the form and send it.
  You will automatically receive an RMA form via email. Please print this file off.
- Send the device along with the RMA form in the packaging to
  R. STAHL Schaltgeräte GmbH (refer to chapter 1.1 for the address).

10 Cleaning

- Switch off the device before cleaning it.
- Check the device for damage before and after cleaning it.
  Decommission damaged devices immediately.
- Devices located in hazardous areas may only be cleaned with a damp cloth to avoid electrostatic charge.
- When cleaning with a damp cloth, use water or mild, non-abrasive, non-scratching cleaning agents.
- Do not use abrasive cleaning agents or solvents.

11 Disposal

- Observe national, local and statutory regulations regarding disposal.
- Separate materials for recycling.
- Ensure environmentally friendly disposal of all components according to statutory regulations.

12 Accessories and spare parts

NOTICE! Malfunction or damage to the device due to the use of non-original components.

Non-compliance can result in material damage.

- Use only original accessories and spare parts from R. STAHL Schaltgeräte GmbH (see data sheet).

EN

13 Appendix A

13.1 Technical data

Explosion protection

Global (IECEx)

Gas and dust

IECEx EPS 22.0046X
Ex db IIC T4/T6*) Gb
Ex db eb IIC T4/T6*) Gb
Ex tb IIIC T80/T100 °C*) Db

Europe (ATEX, UKEX)

Gas and dust

EPS 22 ATEX 1 224 X, EPS 22 UKEX 1 224 X
Ⓔx II 2 G Ex db IIC T4/T6*) Gb
Ⓔx II 2 G Ex db eb IIC T4/T6*) Gb
Ⓔx II 2 D Ex tb IIIC T80/T100 °C*) Db

*)

Temperature class	T6 3)	T4
Max. surface temperature (tb)	T80 °C	T100 °C
Ambient temperature range	-60 to +40 °C 1)	-60 to +70 °C 2) 4)

1) Loop in/loop out wiring up to max. 16 A
2) Loop in/loop out wiring up to max. 16 A,
the connection line and cable entries must be approved for a service temperature of ≥ +90 °C.
3) Not for the XENON variant
4) for XENON variant with plastic lens only for T_a = -60 to +60 °C

Special conditions "X"

Repair work on flameproof joints is only permissible in accordance with the values specified by the manufacturer.

The protective covers and loudspeaker horns must be installed so that they are protected against electrostatic charge.

The T6/T80 °C temperature class is not permissible for the XENON variant with plastic lens.

Certifications and certificates

Certifications

IECEx, ATEX, UKEX, for other certificates, see r-stahl.com

EN

Technical data

Technical data

Product weight	5.08 kg

Electrical data

Rated operational voltage	XENON:	12 to 27.2 V DC 133 to 272 V DC 110 to 240 V AC
	LED:	12 to 27.2 V DC 133 to 272 V DC 110 to 240 V AC

Average input power/ max. current consumption

24 V DC:

	Max. current consumption [mA]	Input power [W]	Max. input power (temporary) [W]
XENON 5 J	350	8	–
LED	1000	14	–

110 V AC:

	Max. current consumption [mA]	Input power [W]	Max. input power (temporary) [W]
XENON 5 J	117	8	–
LED	222	14	–

230 V AC:

	Max. current consumption [mA]	Input power [W]	Max. input power (temporary) [W]
XENON 5 J	75	8	–
LED	124	14	–

Class	I (with internal PE connection)

Ambient conditions

Functional ambient temperature range	Min. -40 °C See certificate for max. ambient temperature

EN

Technical data

Mechanical data

Degree of protection	IP66/IP67 (IEC 60598-1)
Material	
Enclosure	Aluminium EN AC-44300, corrosion-resistant (anti-static paint)
Enclosure colours	Red (RAL 3020)
Calotte cover	Polycarbonate
Mounting Bracket	Stainless steel 1.4404 (316L), seawater-resistant
Short-circuit protection	Integrated back-up fuse
Accessories	Stopping plug: Ex de: 2 x M20/2 x M25 Ex d: 2 x M20/2 x 1/2" NPT Ex d: 2 x M25/2 x 3/4" NPT Cable gland: Ex de: 1 x M20/1 x M25 Mounting Bracket: L-/U-bracket

Luminous characteristics

Effective luminous intensity

Type		LED tower		XENON
Function		Flashing 1 Hz	Blinking 1 Hz	Flashing 1 Hz
Colour	red	128 cd	165 cd	24 cd
	amber	185 cd	239 cd	87 cd
	blue	95 cd	123 cd	25 cd
	green	93 cd	120 cd	23 cd
	clear	360 cd	465 cd	136 cd
	opal	150 cd	194 cd	98 cd
	yellow	298 cd	385 cd	125 cd
	red/white	100 cd	129 cd	–

Luminous flux

Type		LED tower
Function		Continuous light
Colour	red	315 lm
	amber	635 lm
	blue	162 lm
	green	124 lm
	clear	1061 lm
	opal	784 lm
	yellow	984 lm
	red/white	241 lm

EN

Technical data

Pole diagram	XENON:

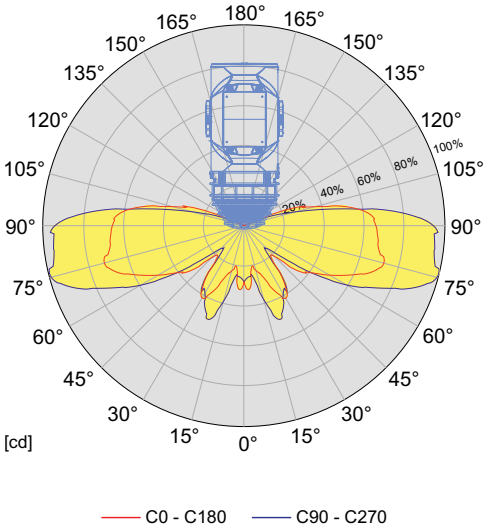

LED tower:

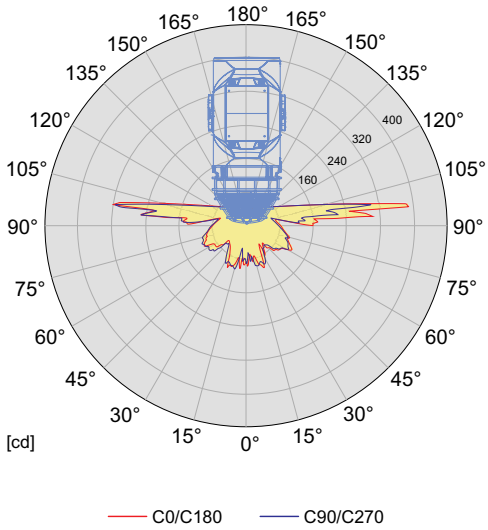

Flash energy	XENON: 5 J
Signal function	LED: - Continuous light (maximum, dimmed) - Flashing light (single flash, double flash, triple flash 1 Hz/2 Hz/3 Hz) - Blinking light (1 Hz/1.5 Hz/2 Hz) - Rotating light (90 rpm, 120 rpm, 180 rpm) - Chaos light XENON: - Flashing light (single flash, 1 Hz/0.75 Hz/0.67 Hz/0.5 Hz)

Mounting/installation

Scope of delivery	- Signalling device according to configuration - 1 x L-bracket - 4 x stopping plugs - 1 x plug-in jumper - 2 x cable entries (for Ex de)

For further technical data, see r-stahl.com.

EN

14 Appendix B

14.1 Device design

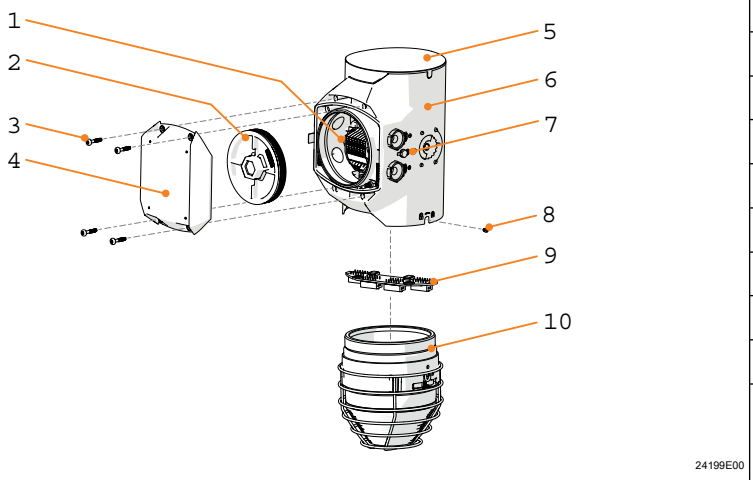

#	Device element
1	Bracket (retaining cable)
2	M95 threaded cover
3	Screws
4	Connection chamber cover
5	Cover
6	Enclosure
7	External earth connection
8	Safety screw
9	PCB
10	Flash cover

Ex d

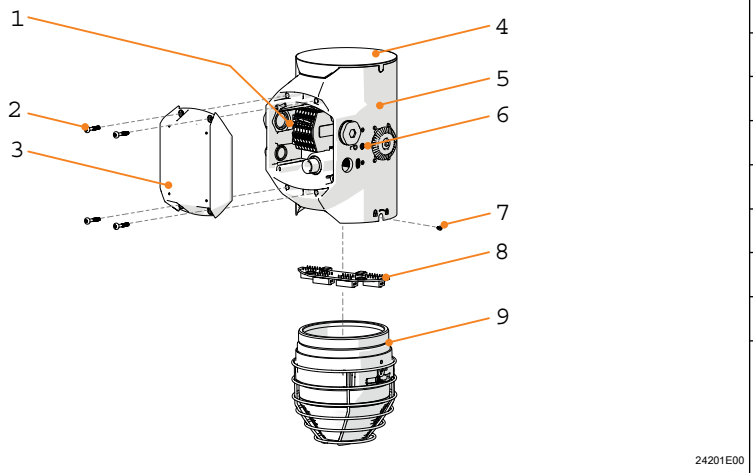

#	Device element
1	Bracket (retaining cable)
2	Screws
3	Connection chamber cover
4	Cover
5	Enclosure
6	External earth connection
7	Safety screw
8	PCB
9	Flash cover

Ex e

EN

14.2 Dimensions/fastening dimensions

Dimensional drawings (all dimensions in mm [inch]) – Subject to change

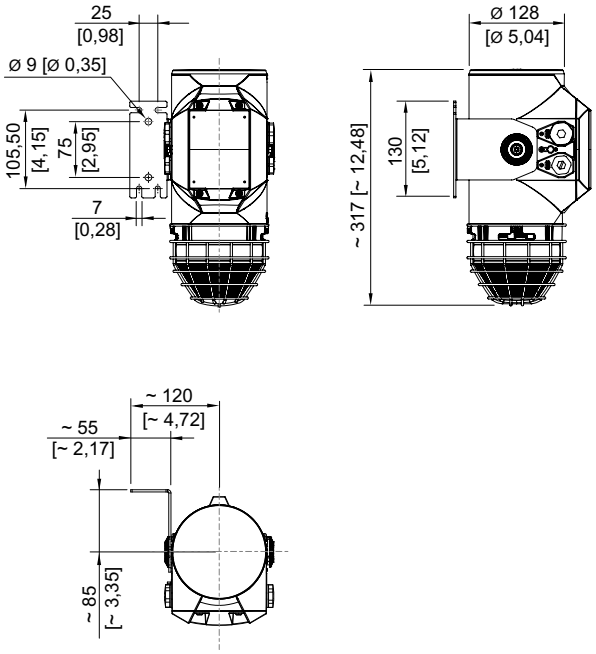

23798E00

EN

15 Appendix C
(Advanced configuration options)

15.1 General settings

All switches are set to OFF ex-factory.

DIP switch 4

1	2	3	4	5	6	Function
OFF						Switches the device function on via the input voltage
ON						Switches the device function on via the B control signal (min. 10.8 V)
	OFF					–
	ON					–
		OFF	OFF			Max. visual signal power (LED)
		OFF	ON			75% visual signal power (LED) (max. current consumption 750 mA)
		ON	OFF			50% visual signal power (LED) (max. current consumption 500 mA)
		ON	ON			25% visual signal power (LED) (max. current consumption 250 mA)
				OFF	OFF	–
				OFF	ON	–
				ON	OFF	–
				ON	ON	–

EN

15.2 Light table

If the device activation via the B control signal is active (see chapter 15.1 for general settings), only two channels are available via the A control signal.
DIP switch 3.6 is used to activate/deactivate the switching function of the visual signal via the A/B control signal.

Visual settings
DIP switch 3

					LED tower (hexagon), monochrome							
					Channel 1		Channel 2		Channel 3		Channel 4	
SW3					A	B	A	B	A	B	A	B
1	2	3	4	5	0	0	1	0	0	1	1	1
0	0	0	0	x	Continuous light		Flashing light (double flash, 1 Hz)		Blinking light 1.0 Hz		Rotating light 120 rpm	
1	0	0	0	x	Blinking light 1.0 Hz		Continuous light (dimmed)		Blinking light 1.5 Hz		Blinking light 2.0 Hz	
0	1	0	0	x	Blinking light 1.5 Hz		Continuous light		Blinking light 1.0 Hz		Flashing light (triple flash, 1 Hz)	
1	1	0	0	x	Blinking light 2.0 Hz		Continuous light		Blinking light 1.0 Hz		Flashing light (triple flash, 1 Hz)	
0	0	1	0	x	Flashing light (single flash, 1 Hz)		Continuous light		Flashing light (double flash, 1 Hz)		Flashing light (triple flash, 1 Hz)	
1	0	1	0	x	Flashing light (double flash, 1 Hz)		Continuous light		Flashing light (triple flash, 1 Hz)		Flashing light (triple flash, 2 Hz)	
0	1	1	0	x	Flashing light (triple flash, 1 Hz)		Continuous light		Flashing light (triple flash, 2 Hz)		Flashing light (single flash, 1 Hz)	
1	1	1	0	x	Flashing light (single flash, 2 Hz)		Continuous light		Flashing light (double flash, 2 Hz)		Flashing light (triple flash, 2 Hz)	
0	0	0	1	x	Continuous light		Rotating light 90 rpm		Rotating light 120 rpm		Rotating light 180 rpm	
1	0	0	1	x	Rotating light 90 rpm		Continuous light		Blinking light 1.0 Hz		Blinking light 2.0 Hz	
0	1	0	1	x	Rotating light 120 rpm		Continuous light		Blinking light 1.0 Hz		Blinking light 2.0 Hz	
1	1	0	1	x	Rotating light 180 rpm		Continuous light		Blinking light 1.0 Hz		Blinking light 2.0 Hz	
0	0	1	1	x	Constantly flashing light		Continuous light		Chaos light 1		Chaos light 2	
1	0	1	1	x	Chaos light 1		Continuous light		Flashing light (triple flash, 1 Hz)		Chaos light 2	
0	1	1	1	x	Chaos light 2		Continuous light		Flashing light (single flash, 1 Hz)		Flashing light (triple flash, 1 Hz)	
1	1	1	1	x	Continuous light		Rotating light 90 rpm		Flashing light (triple flash, 1 Hz)		Chaos light 1	

EN

					LED tower (hexagon), monochrome	
					B = RI (switching of the device function via B control signal active (see chapter 15.1 for general settings))	
SW3					A	A
1	2	3	4	5	0	1
0	0	0	0	x	Continuous light	Flashing light (double flash, 1 Hz)
1	0	0	0	x	Blinking light 1.0 Hz	Continuous light (dimmed)
0	1	0	0	x	Blinking light 1.5 Hz	Continuous light
1	1	0	0	x	Blinking light 2.0 Hz	Continuous light
0	0	1	0	x	Flashing light (single flash, 1 Hz)	Continuous light
1	0	1	0	x	Flashing light (double flash, 1 Hz)	Continuous light
0	1	1	0	x	Flashing light (triple flash, 1 Hz)	Continuous light
1	1	1	0	x	Flashing light (single flash, 2 Hz)	Continuous light
0	0	0	1	x	Continuous light	Rotating light 90 rpm
1	0	0	1	x	Rotating light 90 rpm	Continuous light
0	1	0	1	x	Rotating light 120 rpm	Continuous light
1	1	0	1	x	Rotating light 180 rpm	Continuous light
0	0	1	1	x	Constantly flashing light	Continuous light
1	0	1	1	x	Chaos light 1	Continuous light
0	1	1	1	x	Chaos light 2	Continuous light
1	1	1	1	x	Continuous light	Rotating light 90 rpm

EU Konformitätserklärung
EU Declaration of Conformity
Déclaration de Conformité UE

STAHL

R. STAHL Schaltgeräte GmbH • Am Bahnhof 30 • 74638 Waldenburg, Germany
erklärt in alleiniger Verantwortung / *declares in its sole responsibility / déclare sous sa seule responsabilité,*

dass das Produkt:
that the product:
que le produit:

Akustische und optische Signalgeräte
Audible and visual signalling devices
Appareil de signalisation sonore et lumineux

Typ(en), *type(s), type(s):*

YL60/3, YA60/3, FL60/3

mit den Anforderungen der folgenden Richtlinien und Normen übereinstimmt.
is in conformity with the requirements of the following directives and standards.
est conforme aux exigences des directives et des normes suivantes.

Richtlinie(n) / *Directive(s) / Directive(s)*	**Norm(en)** / *Standard(s) / Norme(s)*
2014/34/EU **ATEX-Richtlinie** *2014/34/EU ATEX Directive* *2014/34/UE Directive ATEX* (OJ L 96, 29/03/2014, p. 309–356)	EN IEC 60079-0:2018 EN 60079-1:2014 EN 60079-7:2015 EN IEC 60079-7: 2015 / A1:2018 EN 60079-31:2014 (IEC 60079-31:2022)
Kennzeichnung, *marking, marquage:*	**II 2 G Ex db IIC T6/T4 Gb** **II 2 G Ex db eb IIC T6/T4 Gb** **II 2 D Ex tb IIIC T80°C/T100°C Db** **CE 0158**
EU-Baumusterprüfbescheinigung: *EU Type Examination Certificate:* *Attestation d'examen UE de type:*	**EPS 22 ATEX 1 224 X** (Bureau Veritas Consumer Products Services Germany GmbH, Businesspark A96, 86842 Tuerkheim, Germany; NB 2004)
Produktnormen nach Anhang II ATEX (aus Niederspannungsrichtlinie): *Product standards according to Annex II ATEX (from Low Voltage Directive):* *Normes de produits selon l'annexe II ATEX (de la Directive Basse Tension):*	EN IEC 60598-1:2021+A11:2022 EN 62471:2008
2014/30/EU **EMV-Richtlinie** *2014/30/EU EMC Directive* *2014/30/UE Directive CEM* (OJ L 96, 29/03/2014, p. 79–106)	EN 50130-4:2011/ A1:2014 EN 61000-6-3:2007/+ A1:2011/ AC:2012 EN 61000-3-2:2014 EN 61000-3-3:2013
2011/65/EU & (EU) 2015/863 RoHS-Richtlinien *2011/65/EU & (EU) 2015/863 RoHS Directives* *2011/65/UE & (UE) 2015/863 Directives RoHS* (OJ L 174, 1/07/2011, p. 88–110 & OJ L 137, 04/06/2015, p. 10-12)	EN IEC 63000:2018

Unterzeichnet für und im Namen von: / *signed for and on behalf of: / signé pour et au nom de:*

R. STAHL Schaltgeräte GmbH

Waldenburg, 2024-01-22

Ort und Datum
Place and date
Lieu et date

Steffen Holtz
Leiter Entwicklung Leuchten und Signalgeräte
Director R&D Lighting and Signalling
Directeur R&D Eclairage & Appareils de signalisation

Daniel Groth
Leiter Qualitätsmanagement Systeme
Director Quality Management Systems
Directeur Systèmes de Management de la Qualité

UK Declaration of Conformity
UK-Konformitätserklärung

R. STAHL Schaltgeräte GmbH • Am Bahnhof 30 • 74638 Waldenburg, Germany
represented locally by, *lokal vertreten durch*
R. STAHL LTD. • 2nd Floor, Bromwich Court, Gorsey Lane, Coleshill • Birmingham B46 1JU, UK
declares in its sole responsibility, *erklärt in alleiniger Verantwortung,*

that the product: *dass das Produkt:*	**Audible and signalling devices** *Akustische und optische Signalgeräte*
Type(s), *Typ(en):*	**YL60/3, YA60/3, FL60/3**

is in conformity with the requirements of the following regulations and standards.
mit den Anforderungen der folgenden Verordnungen und Normen übereinstimmt.

Regulation(s) / *Verordnung(en)*	**Standard(s)** / *Norm(en)*
S.I. 2016/1107 Equipment and Protective Systems Intended for Use in Potentially Explosive Atmospheres Regulations *S.I. 2016/1107 Verordnung für Geräte und Schutzsysteme zur bestimmungsgemäßen Verwendung in explosionsgefährdeten Bereichen*	EN IEC 60079-0:2018 EN 60079-1:2014 EN 60079-7:2015 EN IEC 60079-7: 2015 / A1:2018 EN 60079-31:2014 (IEC 60079-31:2022)
Marking, *Kennzeichnung:*	**II 2 G Ex db IIC T6/T4 Gb** **II 2 G Ex db eb IIC T6/T4 Gb** **II 2 D Ex tb IIIC T80°C/T100°C Db** **UK CA 8505**
UK Type Examination Certificate: *UK-Baumusterprüfbescheinigung:*	**EPS 22 UKEX 1 224 X** (Bureau Veritas Consumer Products Services UK Ltd, 31 Kingsland Grange, Woolston, Warrington, WA1 4RW, UK, AB8507)
Product standards according to S.I. 2016/1101 Electrical Equipment (Safety) Regulation *Produktnormen nach S.I. 2016/1101 (Sicherheits-) Verordnung für elektronische Geräte*	EN IEC 60598-1:2021+A11:2022 EN 62471:2008
S.I. 2016/1091 EMC Regulations *S.I. 2016/1091 EMV-Verordnung*	EN 50130-4:2011/ A1:2014 EN 61000-6-3:2007/+ A1:2011/ AC:2012 EN 61000-3-2:2014 EN 61000-3-3:2013
S.I. 2012/3032 RoHS Regulations *S.I. 2012/3032 RoHS-Verordnung*	EN IEC 63000:2018

Waldenburg, 2024-01-22

Place and date
Ort und Datum

i.V.

S. Holtz
Head of R&D - BU Lighting & Signalling
Leiter Entwicklung Leuchten und Signalgerät

i.V.

D. Groth
Vice President global Quality Management
Leiter globales Qualitätsmanagement