Operating instructions

Additional languages r-stahl.com

EN

Flashing Beacon and Continuous Beacon

Series 6161

EN

Contents

1 General Information 3
1.1 Manufacturer 3
1.2 Information regarding the operating instructions 3
1.3 Further documents 3
1.4 Conformity with standards and regulations 3
2 Explanation of the symbols 4
2.1 Symbols in these operating instructions 4
2.2 Warning notes 4
2.3 Symbols on the device 5
3 Safety notes 5
3.1 Operating instructions storage 5
3.2 Safe use 5
3.3 Modifications and alterations 6
4 Function and device design 6
4.1 Function 6
5 Technical data 7
6 Transport and storage 9
7 Mounting and installation 9
7.1 Dimensions / fastening dimensions 9
7.2 Mounting / dismounting, operating position 10
7.3 Installation 12
8 Commissioning 13
9 Operation 13
9.1 Operation 13
9.2 Troubleshooting 13
10 Maintenance, Overhaul, Repair 14
10.1 Maintenance 14
10.2 Repair 14
10.3 Returning the device 15
11 Cleaning 15
12 Disposal 15
13 Accessories and Spare parts 15

EN

1 General Information

1.1 Manufacturer

R. STAHL Schaltgeräte GmbH
Business Unit Lighting & Signalling
Nordstr. 10
99427 Weimar
Germany

Phone: +49 3643 4324
Fax: +49 3643 4221-76
Internet: r-stahl.com
E-mail: info@r-stahl.com

R. STAHL Schaltgeräte GmbH

Am Bahnhof 30
74638 Waldenburg
Germany

Phone: +49 7942 943-0
Fax: +49 7942 943-4333
Internet: r-stahl.com
E-mail: info@r-stahl.com

1.2 Information regarding the operating instructions

ID-No.: 277897 / 6161623300
Publication Code: 2021-11-18·BA00·III·en·02

The original instructions are the English edition.
They are legally binding in all legal affairs.

1.3 Further documents

- Data sheet

For documents in additional languages, see r-stahl.com.

1.4 Conformity with standards and regulations

IECEx, ATEX, EU Declaration of Conformity and further national certificates can be downloaded via the following link: https://r-stahl.com/en/global/support/downloads/.
IECEx is also available at: http://iecex.iec.ch/

EN

2 Explanation of the symbols

2.1 Symbols in these operating instructions

Symbol	Meaning
	Tips and recommendations on the use of the device
	Danger due to explosive atmosphere
	Danger due to live components

2.2 Warning notes

Warnings must be observed under all circumstances, in order to minimize the risk due to construction and operation. The warning notes have the following structure:

- Signalling word: DANGER, WARNING, CAUTION, NOTICE
- Type and source of danger/damage
- Consequences of danger
- Taking countermeasures to avoid the danger or damage

	DANGER
	Danger to persons Non-compliance with the instruction results in severe or fatal injuries to persons.

	WARNING
	Danger to persons Non-compliance with the instruction can result in severe or fatal injuries to persons.

	CAUTION
	Danger to persons Non-compliance with the instruction can result in light injuries to persons.

NOTICE
Avoiding material damage Non-compliance with the instruction can result in material damage to the device and / or its environment.

EN

2.3 Symbols on the device

Symbol	Meaning
CE 0158 05594E00	CE marking according to the current applicable directive.
02198E00	According to marking, device certified for hazardous areas.
15649E00	Input
15648E00	Output

3 Safety notes

3.1 Operating instructions storage

- Read the operating instructions carefully.
- Store the operating instructions at the mounting location of the device.
- Observe applicable documents and operating instructions of the devices to be connected.

3.2 Safe use

Before mounting

- Read and observe the safety notes in these operating instructions!
- Ensure that the contents of these operating instructions are fully understood by the personnel in charge.
- Use the device in accordance with its intended and approved purpose only.
- Always consult R. STAHL Schaltgeräte GmbH if using the device under operating conditions which are not covered by the technical data.
- We cannot be held liable for damage to the device caused by incorrect or unauthorised use or non-compliance with these operating instructions.

For assembly and installation

- Observe national assembly and installation regulations (e.g. IEC/EN 60079-14).
- Observe national safety and accident prevention regulations.
- During installation and operation, observe the information (characteristic values and rated operating conditions) on the type plates and data plates and information signs located on the device.
- Before installation, make sure that the device is not damaged.

Maintenance, repair, commissioning

- Before commissioning, make sure that the device is not damaged.
- Work on the device, such as installation, maintenance, overhaul, repair, may only be carried out by appropriately authorised and trained personnel.
- Perform only maintenance work or repair described in these operating instructions.

EN

3.3 Modifications and alterations

	DANGER
EX	Explosion hazard due to modifications and alterations to the device! Non-compliance results in severe or fatal injuries. • Do not modify or alter the device.

i	No liability or warranty for damage resulting from modifications and alterations.

4 Function and device design

	DANGER
EX	Explosion hazard due to improper use! Non-compliance results in severe or fatal injuries. • Use the device only in accordance with the operating conditions described in these operating instructions. • Use the device only for the intended purpose specified in these operating instructions.

4.1 Function

Product series 6161 provides a visual signal intended to alert, warn or draw attention to an event. It is designed for use in potentially explosive gas and dust environments or areas of harsh environmental conditions. The product variants can be used in ATEX and IECEx zones 1,2 and 21, 22.

EN

5 Technical data

Explosion Protection

Version	6161/2 Flashing Beacon	6161/3 Continuous Beacon
Global (IECEx)		
Gas and dust	IECEx EPS 20.0004X	
	Ex db eb IIC T* Gb	Ex db eb op is IIC T* Gb
	Ex tb IIIC T* °C Db	Ex tb op is IIIC T* °C Db
	* see ambient conditions for temperature class	
Note	X equipment with a "low" mechanical hazard level. Observe the warning note in the chapter "Mounting/dismounting, operating position"!	
Europe (ATEX)		
Gas and dust	EPS 20 ATEX 1 008 X	
	Ⓔx II 2G Ex db eb IIC T* Gb	Ⓔx II 2G Ex db eb op is IIC T* Gb
	Ⓔx II 2G Ex tb IIIC T* °C Db	Ⓔx II 2G Ex tb op is IIIC T* °C Db
	* see ambient conditions for temperature class	
Note	X equipment with a "low" mechanical hazard level. Observe the warning note in the chapter "Mounting/dismounting, operating position"!	
Certifications and certificates		
Certificates	IECEx, ATEX	
Ship approval	GL	–

Technical Data

Version	6161/2 Flashing Beacon			6161/3 Continuous Beacon		
Electrical data						
Rated values	60 to 80 V DC 42 to 48 V AC	0 Hz 50 to 60 Hz	0.13 to 0.11 A 0.3 A	24 V AC / DC	0 Hz 50 to 60 Hz	0.12 A
	12 to 48 V DC 24 to 42 V AC	0 Hz 50 to 60 Hz	0.3 to 0.5 A	230 V AC	50 to 60 Hz	0.02 A
	110 to 127 V AC	50 to 60 Hz	0.11 A			
	230 V AC	50 to 60 Hz	0.08 A			
Back-up fuse	4 AT (Fuse slow-blow or automatic circuit breaker C characteristic)					
Protection class	I (internal and external PE connection terminal according to IEC/EN 60598)					

EN

Technical Data

Version	6161/2 Flashing Beacon	6161/3 Continuous Beacon
Luminous characteristics		
Flashing energy	5 Joules	–
Flashing frequency	1 Hz	–
Duty cycle	100 %	100 %
Service life	6 x 10^6 flashes	–
Ambient conditions		
Ambient temperature	* Temperature class	* Temperature class

Type	T_{amb}	Gas	Dust
6161/2	+40 °C	T6	T85 °C
	+50 °C	T5	T100 °C

Type	T_{amb}	Gas	Dust
6161/3	+40 °C	T6	T65 °C
	+50 °C	T6	T75 °C

Mechanical data	
Degree of protection	IP66 according to IEC/EN 60529
Material	
Enclosure	aluminium alloy copper-free, yellow/black powder-coated
Light dome	polycarbonate, prismatic
Wire guard	Stainless steel (can be ordered as accessories)
Fixing elements	stainless steel
Sealing ring	NBR-O-ring seal
Special lock	Ex d enclosure; M4 hexagon socket stud
Mounting / Installation	
Cable glands	1 x M20 x 1.5 stopping plug 1 x M20 x 1.5 cable gland metal cable gland on request
Clamping range	4 to 13 mm
Connection type	screw terminal block, 3-pole
Marking	L1 + N + PE
Connection cross-section	
Solid	2 x 4 mm^2
finely stranded	2 x 2.5 mm^2
Protective conductor connection	
Inside	max. 6 mm^2
Outside	max. 2.5 mm^2 flexible / 4 mm^2 rigid

For further technical data, see r-stahl.com.

EN

6 Transport and storage

- Transport and store the device only in the original packaging.
- Store the device in a dry place (no condensation) and vibration-free.
- Do not drop the device.

7 Mounting and installation

7.1 Dimensions / fastening dimensions

Dimensional drawings (all dimensions in mm [inches]) – Subject to modification

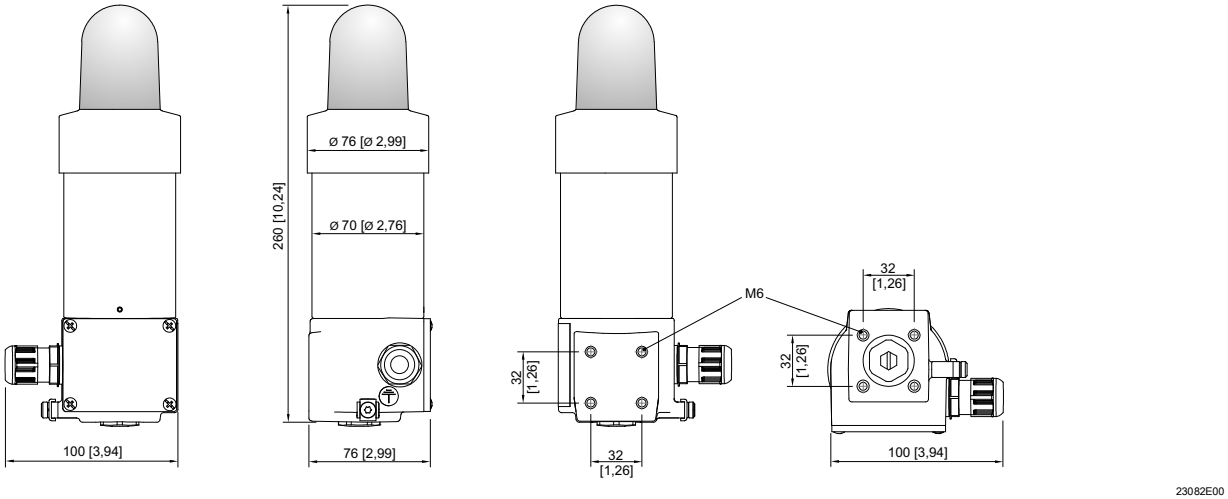

6161 flashing beacon

Mounting accessories

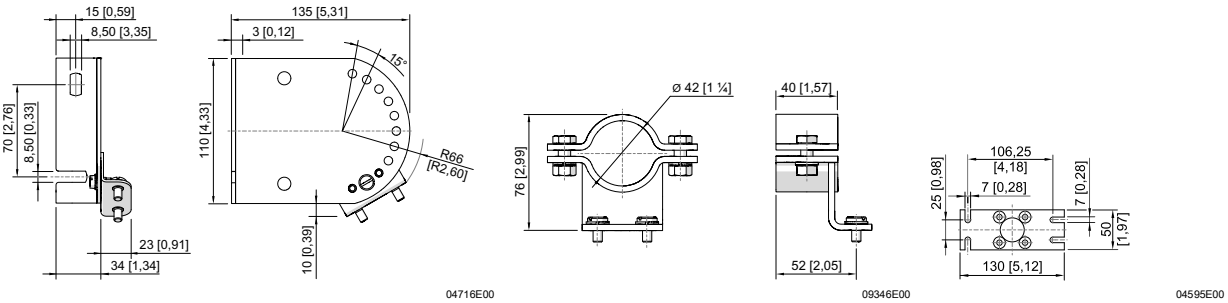

Wall and floor mounting bracket | Pipe clamp | Mounting plate

EN

7.2 Mounting / dismounting, operating position

	DANGER
	Explosion hazard due to electrostatic discharge! Non-compliance results in severe or fatal injuries. Do not use the device in strong charge-generating environments! The following processes/activities should be avoided: • accidental friction • particle currents

	DANGER
	Explosion hazard due to an insufficiently protected device! Non-compliance results in severe or fatal injuries. • Mount the device in an area that is protected from mechanical influences or with the wire guard available as an accessory.

	Only mount the device in an upright or horizontal position (not overhead or on the ceiling).

	See datasheet for part numbers and ordering information.

7.2.1 Mounting on mounting plate

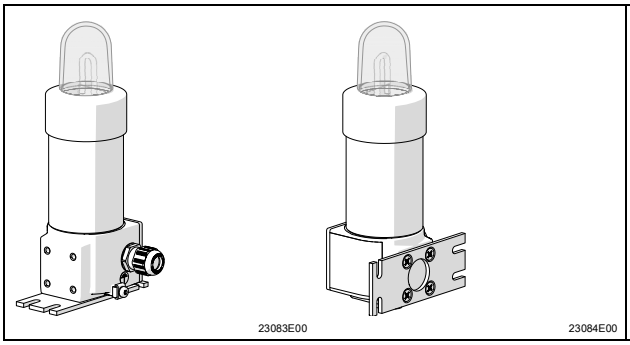	• Mounting plate for lateral wall and / or bottom assembly.

EN

7.2.2 Installation with pipe clamp

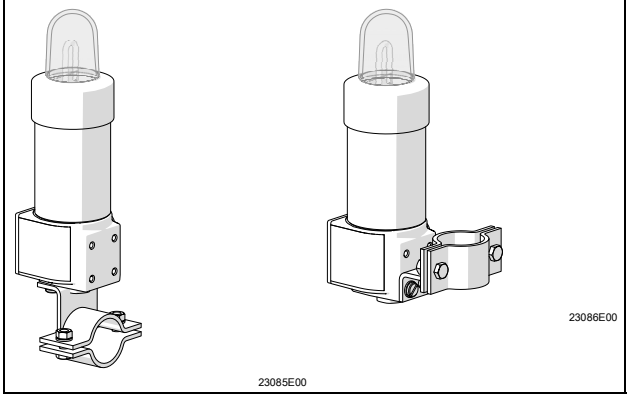	• Mounting of pipe clamps for a pipe diameter 1 1/2“, 1 1/4“ or 2“.

7.2.3 Mounting with attachment bracket

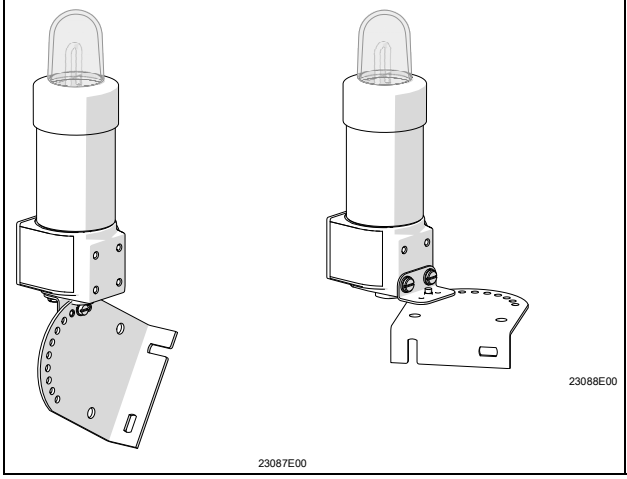	• Wall or floor mounting bracket.

EN

7.3 Installation

	WARNING
	Danger of electric shock due to energised parts! Non-compliance can result in severe or fatal injuries. • All connections and wiring must be disconnected from the power supply. • Secure the connections against unauthorized switching.

Electrical Connection

- Clamping must be carried out precisely!
- Do not clamp any part of the conductor insulation!
- Do not interchange the conductors!
- Observe the technical regulations when connecting the conductor!
- Clamp the conductor firmly!

i	Two conductors can be installed under one connection terminal. Material and cross section of both conductors must be identical. The conductors can be connected without any special preparations.

EN

8 Commissioning

	DANGER
	Explosion hazard due to incorrect installation! Non-compliance results in severe or fatal injuries. • Check the device for proper installation before commissioning. • Comply with national regulations.

Before commissioning, ensure the following:
- Check the mounting and installation.
- Check the device for damage.
- If necessary, remove foreign bodies.
- If necessary, clean the connection chamber.
- Check if the conductors have been inserted correctly.
- Check if all screws and nuts have been tightened firmly.
- Check if all drilled holes are closed.
- Check whether all the cable entries and stopping plugs have been tightened firmly.
- Check if all conductors have been clamped firmly.
- Check if the line voltage and the rated operational voltage are consistent.
- Check if the permissible conductor diameter for the corresponding cable entries have been used.
- Check if the device is closed according to regulations.

9 Operation

9.1 Operation

Product series 6161 provides a visual signal intended to alert, warn or draw attention to an event.

9.2 Troubleshooting

If an error occurs please re-visit the earlier sections of this document.
If the error cannot be eliminated using the mentioned procedures:
- Contact R. STAHL Schaltgeräte GmbH.

For fast processing, have the following information ready:
- Type and serial number of the device
- Purchase information
- Error description
- Intended use (in particular input / output wiring)

EN

10 Maintenance, Overhaul, Repair

	CAUTION
	Risk of electric shock or malfunction of the device due to unauthorized work! Non-compliance can result in light injuries! • Before carrying out work on the device, switch off voltage supply. • Work performed on the device must only be carried out by authorized and appropriately trained qualified electricians.

10.1 Maintenance

- Consult the relevant national regulations to determine the type and extent of inspections.
- Adapt inspection intervals to the operating conditions.
- Perform maintenance and repair work in accordance with IEC 60079-17 and IEC 60079-19.

	Observe the relevant national regulations in the country of use.

As a minimum, check the following points during maintenance work on the device:

- Whether the clamping screws holding the cables are securely seated
- Whether the device has cracks or other visible signs of damage,
- Whether the seal shows signs of ageing or damage (completely replace enclosure components with damaged foamed seal)
- Whether the device is clean inside and out
- Whether the permissible temperatures (in accordance with EN 60079) are complied with
- Whether the cable entry is intact and securely tightened
- Whether the cables and lines show signs of ageing and damage
- Intended use and function.
- Damage to the surface of the flameproof flame path.
- Corrosion at the flameproof flame path
- Tighten the M4 safety screw (tightening torque 1.3 Nm),
- The external equipotential bonding conductor (as required) is still connected.
- The mounting screws have been tightened firmly.

10.2 Repair

	DANGER
	Explosion hazard due to improper repair! Non-compliance results in severe or fatal injuries. • Repair work on the devices must be performed only by R. STAHL Schaltgeräte GmbH.

EN

10.3 Returning the device

- Only return or package the devices after consulting R. STAHL!
  Contact the responsible representative from R. STAHL.

R. STAHL's customer service is available to handle returns if repair or service is required.

- Contact customer service personally.

or

- Go to the r-stahl.com website.
- Under "Support" > "RMA" > select "RMA-REQUEST".
- Fill out the form and send it.
  You will automatically receive an RMA form via email. Please print this file off.
- Send the device along with the RMA form in the packaging to
  R. STAHL Schaltgeräte GmbH (refer to chapter 1.1 for the address).

11 Cleaning

- To avoid electrostatic charging, the devices located in potentially explosive areas may only be cleaned using a damp cloth.
- When cleaning with a damp cloth, use water or mild, non-abrasive, non-scratching cleaning agents.
- Do not use aggressive detergents or solvents.

12 Disposal

- Observe national and local regulations and statutory regulation regarding disposal.
- Separate materials when sending it for recycling.
- Ensure environmentally friendly disposal of all components according to the statutory regulations.

13 Accessories and Spare parts

NOTICE
Malfunction or damage to the device due to the use of non-original components. Non-compliance can result in material damage. • Use only original accessories and spare parts from R. STAHL Schaltgeräte GmbH.

i	For accessories and spare parts, see data sheet on our homepage r-stahl.com.

EU-Konformitätserklärung
EU Declaration of Conformity
Déclaration de Conformité UE

R. STAHL Schaltgeräte GmbH • Am Bahnhof 30 • 74638 Waldenburg, Germany
erklärt in alleiniger Verantwortung / *declares in its sole responsibility / déclare sous sa seule responsabilité,*

dass das Produkt: *that the product:* *que le produit:*	**Optisches Signalgerät** *Visual signaling device* *Appareil de signalisation lumineux*
Typ(en), *type(s), type(s):*	**6161/.-..-...-.-1**

mit den Anforderungen der folgenden Richtlinien und Normen übereinstimmt.
is in conformity with the requirements of the following directives and standards.
est conforme aux exigences des directives et des normes suivantes.

Richtlinie(n) / *Directive(s) / Directive(s)*	**Norm(en)** / *Standard(s) / Norme(s)*
2014/34/EU **ATEX-Richtlinie** *2014/34/EU* *ATEX Directive* *2014/34/UE* *Directive ATEX* (OJ L 96, 29/03/2014, p. 309–356)	EN IEC 60079-0: 2018 EN 60079-1: 2014 EN IEC 60079-7: 2015 + A1: 2018 EN 60079-28: 2015 EN 60079-31: 2014
Kennzeichnung, *marking, marquage:*	**II 2 G Ex db eb IIC T6 / T5 Gb** **II 2 G Ex db eb op is IIC T6 Gb** **II 2 D Ex tb IIIC T85 °C / T100 °C Db** **II 2 D Ex tb op is IIIC T65 °C / T75 °C Db** Ex CE 0158
EU-Baumusterprüfbescheinigung: *EU Type Examination Certificate:* *Attestation d'examen UE de type:*	**EPS 20 ATEX 1 008 X** (Bureau Veritas Consumer Products Services Germany GmbH, Businesspark A96, 86842 Tuerkheim, Gemany)
Produktnormen nach Anhang II ATEX (aus Niederspannungsrichtlinie): *Product standards according to Annex II ATEX (from Low Voltage Directive):* *Normes de produits selon l'annexe II ATEX (de la Directive Basse Tension):*	EN IEC 60598-1:2021 + A11: 2022 EN 62471: 2008
2014/30/EU **EMV-Richtlinie** *2014/30/EU* *EMC Directive* *2014/30/UE* *Directive CEM* (OJ L 96, 29/03/2014, p. 79–106)	EN 50130-4: 2011 / A1: 2014 EN 61000-3-2: 2014 EN 61000-3-3: 2013 EN 61000-6-4:2007 / A1:2011
2011/65/EU & (EU) 2015/863 RoHS-Richtlinien *2011/65/EU & (EU) 2015/863 RoHS Directives* *2011/65/UE & (UE) 2015/863 Directives RoHS* (OJ L 174, 1/07/2011, p. 88–110 & OJ L 137, 04/06/2015, p. 10-12)	EN IEC 63000: 2018

Unterzeichnet für und im Namen von: / *signed for and on behalf of: / signé pour et au nom de:*
R. STAHL Schaltgeräte GmbH

Waldenburg, 19.02.2025

Ort und Datum *Place and date* *Lieu et date*	**Steffen Holtz** **Leiter Entwicklung Leuchten und Signalgeräte** *Director R&D Lighting and Signalling* *Directeur R&D Eclairage & Appareils de signalisation*	**Daniel Groth** **Leiter Qualitätsmanagement Systeme** *Director Quality Management Systems* *Directeur Systèmes de Management de la Qualité*