FBV INC.®
Engineered Solutions

FLOATING

BALL VALVE

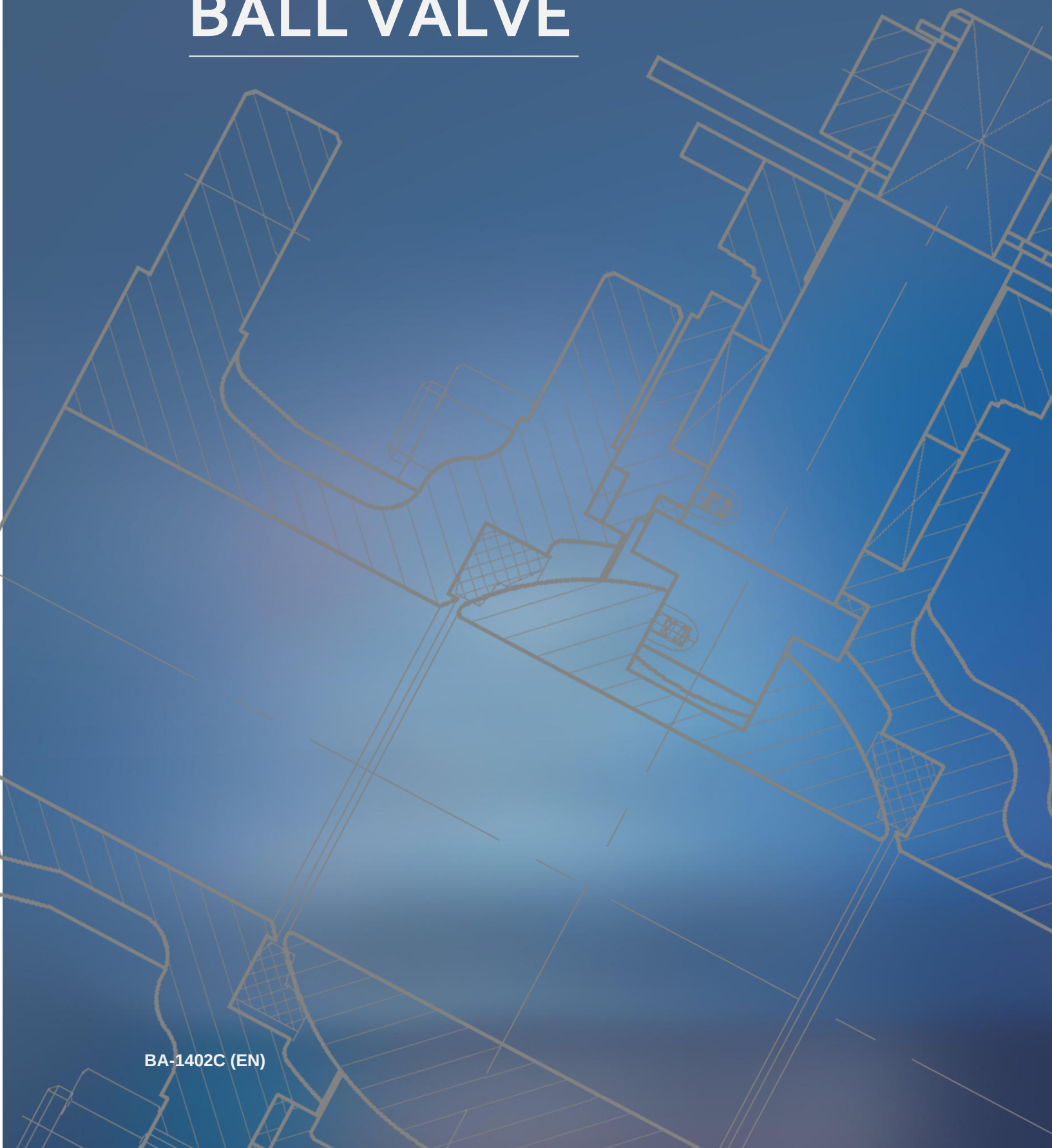

BA-1402C (EN)

ABOUT US

FBV Inc. is an ISO 9001 certified company specializing in manufacturing industrial valves including ball valves, gate valves, globe valves, check valves, plug valves and butterfly valves in carbon steel, stainless steel, duplex stainless and alloy materials. Our products conform to the latest industry standards in accordance to ANSI, ASME and API.

FBV today has over 600,000 square feet of manufacturing facilities. Through its conviction to provide only the finest quality products and services to match the need of our customers, FBV has now established itself as a serious player in the valve business.

FBV INC has sold worldwide in North America, Europe, South America, South Asia, Africa and the Middle East. We consider product quality and customer satisfaction as our highest priority. We look forward to new customer relationships by providing value, quality, customer service, honesty, integrity and the commitment to maintain product consistency with each and every order.

MISSION STATEMENT

We at FBV, Inc. commit to taking ACTION:

- Adopt the latest technology to take the product quality to the next level;
- Consistently provide on-time services to our customers;
- Train and develop talented people with strong work ethics to deliver effective performance;
- Improve and enhance engineering designs to ensure product performance;
- Optimize management systems and increase productivity;
- Never forget our customer and employee needs.

Engineered Solutions®

TABLE OF INDEX	*PAGE*

Introduction, *Features*	*3-4*
Overview, *Split Body*	*5*
Dimensions and Weights, *Class 150 (PN 20)*	*6*
Dimensions and Weights, *Class 300 (PN 50)*	*7*
Dimensions and Weights, *Class 600 (PN 100)*	*8*
Dimensions and Weights, *Class 900/1500 (PN 150/250)*	*9*
Overview, *Split Body (SW/NPT)*	*10*
Dimensions and Weights, *Class 800/1500 (Short Pattern)*	*11*
Dimensions and Weights, *Class 800/1500 (Long Pattern)*	*12*
Top Mounting Dimensions And Torque	*13-14*
Seat and Seal Material, *Selection Guide*	*15*
Valve Figure Number, *How To Order*	*16-17*

This page is intentionally left blank.

INTRODUCTION

A ball valve is a valve with a spherical disc, the part of the valve which controls the flow through it. The sphere has a hole, or port, through the middle so that when the port is in line with both ends of the valve, flow will occur. When the valve is closed, the hole is perpendicular to the ends of the valve, and flow is blocked.

BLOWOUT PROOF STEM

The valve stem is made with a shoulder at the bottom end. It's securely retained by the valve body, to avoid that the stem, under certain operating conditions, accidentally blows out. Other designs are available on request.

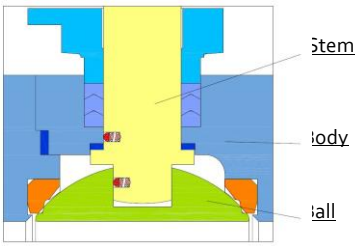

Because the ball and stem in a ball valve are suspended on non-metallic parts, i.e. the seat seal and stem seal, there is a possibility a static charge may build up on the stem-ball, a mechanical (antistatic metal spring and ball) is introduced in the design to maintain the metal-to-metal contact between the rotating ball/stem and the valve body which will ground any charges to the valve body.

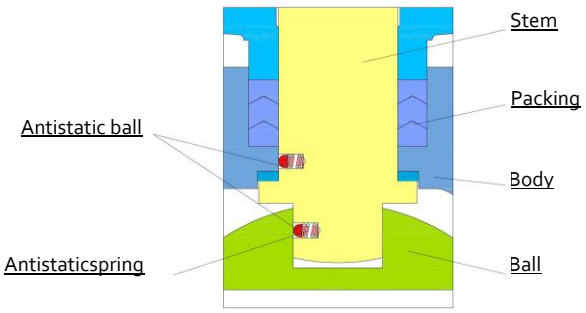

FIRE SAFE DESIGN

During a fire, non-metallic soft material will be burnt, subsequently seat leakage or external leakage may occur and cause the fire to spread or contaminate the environment. FBV ball valves are fire tested in accordance with API 6FA or API 607 witnessed and certified by TUV SUD.

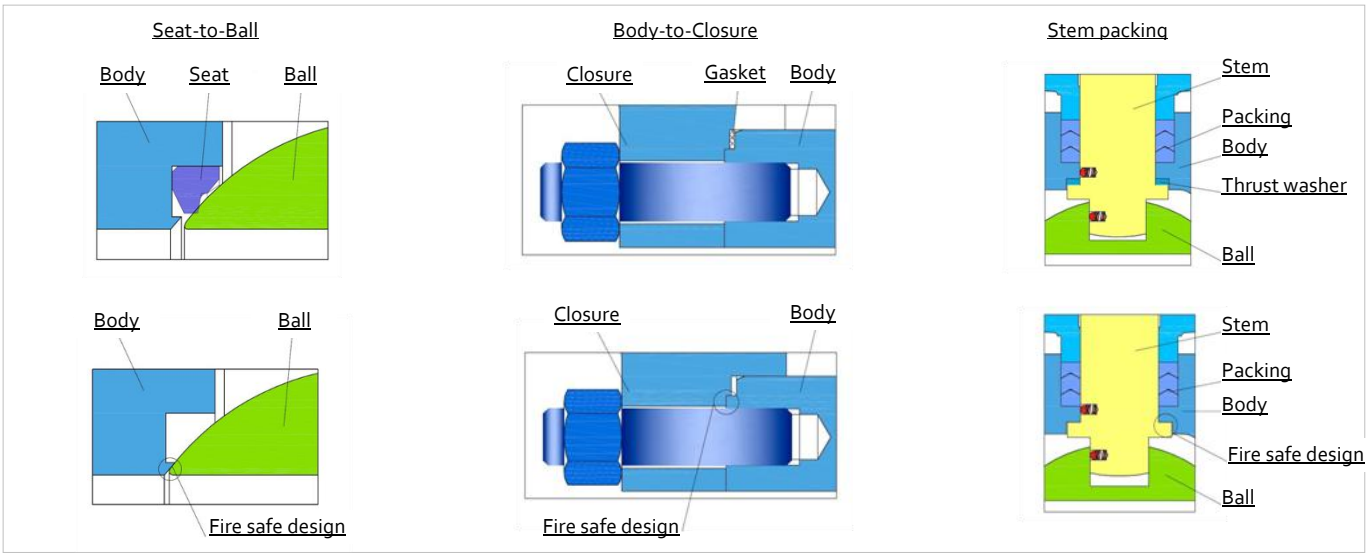

FLOATING BALL VALVE

SCOPE OF PRODUCTS

Legends:
A – Available in Casting and Forging
B – Available in Casting Only
C – Available Forging Only
D– Not Usually Required

Size in/*mm*	Class 150 PN 20	Class 300 PN 50	Class 600 PN 100	Class 800 PN 136	Class 900 PN 150	Class 1500 PN 250	Class 2500 PN 420
½ *15*	A	A	A	C	C	C	C
¾ *20*	A	A	A	C	C	C	C
1 *25*	A	A	A	C	C	C	C
1½ *40*	A	A	A	C	C	C	
2 *50*	A	A	A	C	C	C	
2.5 *65*	A	A	A				
3 *80*	A	A	AD				
4 *100*	A	A					
6 *150*	A	A					
8 150	AD						

FLOW COEFFICENT

Nominal Size *in/mm*	Class 150 PN 20		Class 300 PN 50		Class 600 PN 100		Class 900 PN 150		Class 1500 PN 250	
	Cv	Kv	Cv	Kv	Cv	Kv	Cv	Kv	Cv	Kv
½ *15*	25	21	25	18	20	17	16	14	16	14
¾ *20*	56	48	56	40	40	34	34	29	34	29
1 *25*	95	81	95	69	64	54	55	47	55	47
1½ *40*	308	262	308	223	308	262	165	140	165	140
2 *50*	500	425	430	361	370	315	320	272	320	272
3 *80*	1,360	1,156	1,100	983	1,020	867	920	782	820	697
4 *100*	2,500	2,125	2,000	1,806	1,850	1,573	1,760	1,496	1,600	1,360
6 *150*	4,060	3,451	4,056	2,933	3,410	2,899	4,300	3,655	4,150	3,528

CALCULATION OF FLOW COEFFICIENT

Flow coefficient Cv (Kv is the metric equivalent) is the rate of flow in gallon per minute with the pressure drop of 1 psi across the valve. The flow coefficients shown in the above table are determined with equations as follows:

For liquids:

$$Q_l = C_v(\Delta P/SG)^{1/2}$$

Where:
Q_l = Flow of liquid (gallon/minute)
ΔP = Pressure drop in psi (P_1-P_2)
SG = Specific gravity (1 for liquid)

For gases (non-critical):

$$Q_g = 61 \cdot C_v(P_2 \cdot P_1 \,/\, SG)^{1/2}$$

Where:
Q_g = Flow of gases (SFH at STP)
P_2 = Outlet pressure (psi)
P_1 = Inlet pressure (psi)
SG = Specific gravity (1 for gas)

Engineered Solutions

FLOATING BALL VALVE

OVERVIEW

2-PIECE SPLIT BODY

Forge Steel

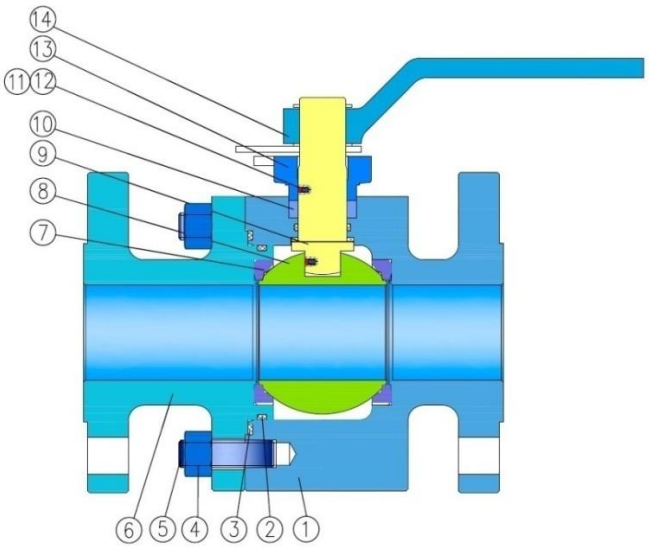

Casting Steel

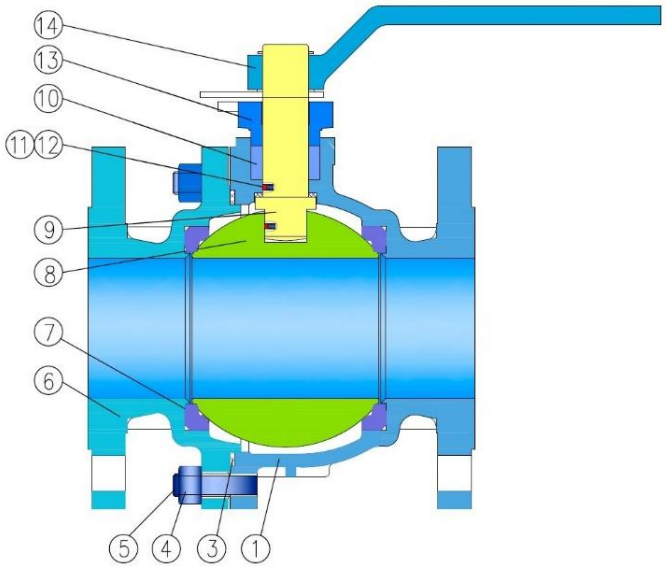

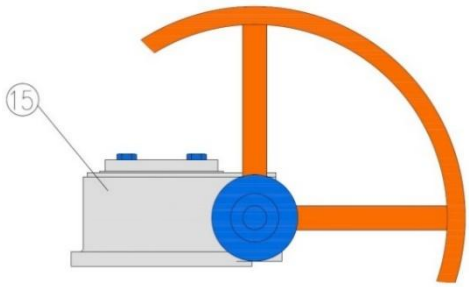

STANDARDS

Design & manufacture	API 6D, API 608, ISO 14313
Face-to-face	API 6D, ASME B16.10
End Dimension	ASME B16.5 (RF, RTJ) ASME B16.25 (BW)
Test & inspection	API 6D, API 598
Fire safe	API 6FA, API 607
Other	NACE MR 01-75, MR 0103

PART LIST

1. Body
2. O-ring
3. Gasket
4. Nut
5. Stud
6. Closure
7. Seat
8. Ball
9. Stem
10. Packing
11. Anti-static Spring
12. Anti-static Ball
13. Gland Flange
14. Lever
15. Gearbox

TYPICAL MATERIALS

Body/Closures	(Forged)A105N, A182 F304, F304L, F316, F316L, F51, F53, F55, MONEL, A350 LF2, LF3, LF5, B462 ALLOY 20, B564 INCONEL600, INCONEL 625, HASTELLOY (Casting)A216 WCB, A351 CF3, CF8, CF3M, CF8M, CN7M (A990 CN3MCU), A995 4A, 5A, 6A, A352 LCB, LCC, LC2, A494 M35-1, CY40, CW6MC.CW12MW
Ball	CS+ENP, A182 F304, F304L, F316, F316L, F51, F53, F55, MONEL, B462 ALLOY 20, B564 INCONEL600, INCONEL 625, HASTELLOY, CS/SS+TCC, CS/SS+NI60, CS/SS+STL
Seat retainer	CS+ENP, A182 F304, F304L, F316, F316L, F51, F53, CS/SS+TCC, CS/SS+Ni55
Seal Ring	PTFE, RPTFE, PCTFE, Devlon, PEEK
Stem	A182 F6A, F316, F51, F53, F55, A105N+ENP, AISI4140+ENP, 17-4PH, XM-19, MONEL, B462 ALLOY 20, B564 INCONEL600, INCONEL 625, HASTELLOY
Packing	Graphite, PTFE, RPTFE
O-ring	Viton, HNBR, FVMQ, AFLAS

DIMENSIONS AND WEIGHTS

ASME CLASS 150 (PN 20)

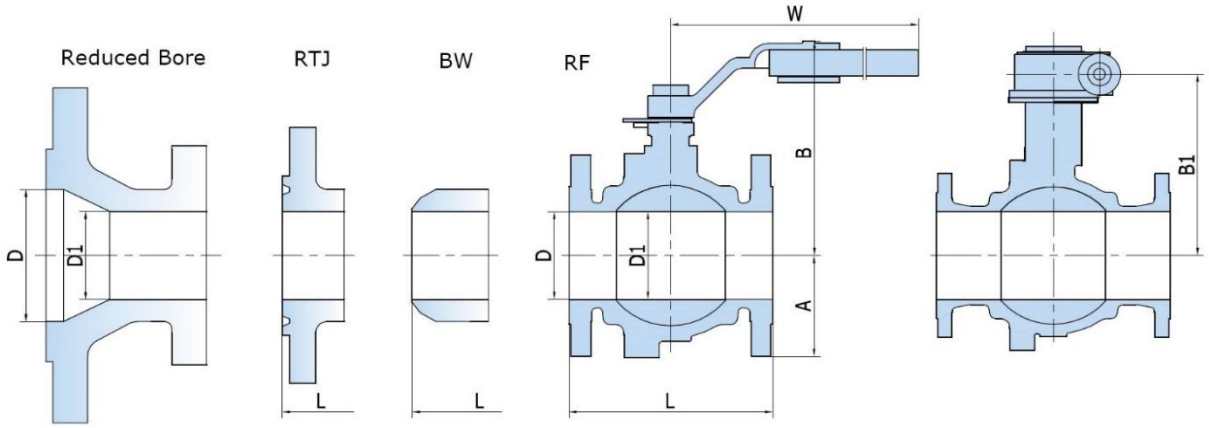

ASME CLASS 150 (PN 20) FULL BORE

Size *in/mm*	D	D1	L			Casting				Forging				Weight	
			RF	RTJ	BW	A	B	B1	W	A	B	B1	W	Casting *(lb/kg)*	Forging *(lb/kg)*
½ *15*	0.5 *12.7*	0.5 *12.7*	4.25 *108*	-	4.25 *108*	1.77 *45*	3.15 *80*	4.89 *114*	7.87 *200*	1.77 *45*	3.15 *80*	4.33 *110*	7.87 *200*	6 *2.5*	7 *3*
¾ *20*	0.75 *19.1*	0.75 *19.1*	4.62 *117*	-	4.62 *117*	1.97 *50*	3.47 *85*	5.31 *135*	7.87 *200*	1.97 *50*	3.35 *85*	5.11 *130*	7.87 *200*	8 *3.5*	9 *4*
1 *25*	1 *25.4*	1 *25.4*	5 *127*	5.5 *140*	5 *127*	2.16 *55*	3.54 *90*	6.3 *160*	7.87 *200*	2.16 *55*	3.54 *90*	6.1 *155*	7.87 *200*	12 *5.6*	15 *6.5*
1¼ *32*	1.25 *31.8*	1.25 *31.8*	5.5 *140*	6 *153*	5.5 *140*	2.36 *60*	4.33 *110*	6.70 *170*	9.84 *250*	2.36 *60*	4.33 *110*	6.5 *165*	9.84 *250*	14 *6.2*	21 *9.4*
1½ *40*	1.5 *38.1*	1.5 *38.1*	6.5 *165*	7 *178*	6.5 *165*	2.48 *63*	4.53 *115*	7.10 *180*	13 *330*	2.48 *63*	4.53 *115*	6.97 *177*	13 *330*	16 *7*	17 *12*
2 *50*	1.94 *49*	1.94 *49*	7 *178*	7.5 *191*	7 *178*	3 *76*	5.9 *150*	7.5 *191*	13 *330*	3 *76*	5.6 *142*	7.32 *186*	13 *330*	29 *13*	35 *16*
2½ *65*	2.44 *62*	2.44 *62*	7.5 *191*	8 *203*	7.5 *191*	3.45 *85*	6.1 *155*	7.83 *200*	13 *330*	3.45 *85*	5.9 *150*	7.67 *195*	13 *330*	35 *16*	44 *20*
3 *80*	2.91 *74*	2.91 *74*	8 *203*	8.5 *216*	8 *203*	3.74 *95*	6.3 *160*	8.46 *215*	13 *330*	3.74 *95*	6.1 *155*	8.1 *206*	13 *330*	49 *22*	64 *29*
4 *100*	3.94 *100*	3.94 *100*	9 *229*	9.5 *242*	9 *229*	4.33 *110*	8.27 *210*	10.04 *255*	18.11 *460*	4.33 *110*	7.67 *195*	9.5 *242*	18.11 *460*	83 *37.5*	106 *48*
6 *150*	5.91 *150*	5.91 *150*	15.5 *394*	16 *407*	15.5 *394*	6.70 *170*	12.2 *310*	12.87 *327*	30.3 *770*	6.70 *170*	11.22 *285*	12.44 *316*	30.3 *770*	216 *98*	304 *138*

ASME CLASS 150 (PN 20) REDUCED BORE

Size *in/mm*	D	D1	L			Casting				Forging				Weight	
			RF	RTJ	BW	A	B	B1	W	A	B	B1	W	Casting *(lb/kg)*	Forging *(lb/kg)*
½ *15*	0.5 *12.7*	0.375 *9.5*	4.25 *108*	-	4.25 *108*	1.77 *45*	3.15 *80*	4.89 *114*	7.87 *200*	1.77 *45*	3.15 *80*	4.33 *110*	7.87 *200*	6 *2.5*	7 *3*
¾ *20*	0.75 *19.1*	0.5 *12.7*	4.62 *117*	-	4.62 *117*	1.97 *50*	3.15 *80*	4.89 *114*	7.87 *200*	1.97 *50*	3.35 *85*	5.11 *130*	7.87 *200*	7 *3*	8 *3.5*
1 *25*	1 *25.4*	0.75 *19.1*	5 *127*	5.5 *140*	5 *127*	2.16 *55*	3.47 *85*	5.31 *135*	7.87 *200*	2.16 *55*	3.54 *90*	6.1 *155*	7.87 *200*	10 *4.5*	12 *5.5*
1¼ *32*	1.25 *31.8*	1 *25.4*	5.5 *140*	6 *153*	5.5 *140*	2.36 *60*	3.54 *90*	6.3 *160*	7.87 *200*	2.36 *60*	4.33 *110*	6.5 *165*	9.84 *250*	12 *5.5*	16 *7.2*
1½ *40*	1.5 *38.1*	1.25 *31.8*	6.5 *165*	7 *178*	6.5 *165*	2.48 *63*	4.33 *110*	6.70 *170*	9.84 *250*	2.48 *63*	4.53 *115*	6.97 *177*	13 *330*	14 *6.3*	18 *8*
2 *50*	1.94 *49*	1.5 *38.1*	7 *178*	7.5 *191*	7 *178*	3 *76*	4.53 *115*	7.10 *180*	13 *330*	3 *76*	5.6 *142*	7.32 *186*	13 *330*	20 *9*	30 *13.5*
2½ *65*	2.44 *62*	1.94 *49*	7.5 *191*	8 *203*	7.5 *191*	3.45 *85*	5.9 *150*	7.5 *191*	13 *330*	3.45 *85*	5.9 *150*	7.67 *195*	13 *330*	32 *14.5*	39 *17.5*
3 *80*	2.91 *74*	1.94 *49*	8 *203*	8.5 *216*	8 *203*	3.74 *95*	6.1 *155*	7.83 *200*	13 *330*	3.74 *95*	6.1 *155*	8.1 *206*	13 *330*	42 *19*	51 *23*
4 *100*	3.94 *100*	2.91 *74*	9 *229*	9.5 *242*	9 *229*	4.33 *110*	6.3 *160*	8.46 *215*	13 *330*	4.33 *110*	7.67 *195*	9.5 *242*	18.11 *460*	66 *30*	85 *38.5*
6 *150*	5.91 *150*	3.94 *100*	15.5 *394*	16 *407*	15.5 *394*	6.70 *170*	8.27 *210*	10.04 *255*	18.11 *460*	6.70 *170*	11.22 *285*	12.44 *316*	30.3 *770*	133 *60*	205 *93*
8 *201*	8 *201*	5.91 *150*	18 *457*	18.5 *470*	18 *457*	6.73 *175*	12.2 *310*	12.87 *327*	30.3 *770*	6.73 *175*	11.22 *285*	12.44 *316*	30.3 *770*	234 *106*	289 *131*

1. The dimension and weights are for reference only and subject to change without notice.
2. Contact sales representative if further information is needed.

Engineered Solutions ®

FLOATING BALL VALVE

DIMENSIONS AND WEIGHTS

ASME CLASS 300 (PN 50)

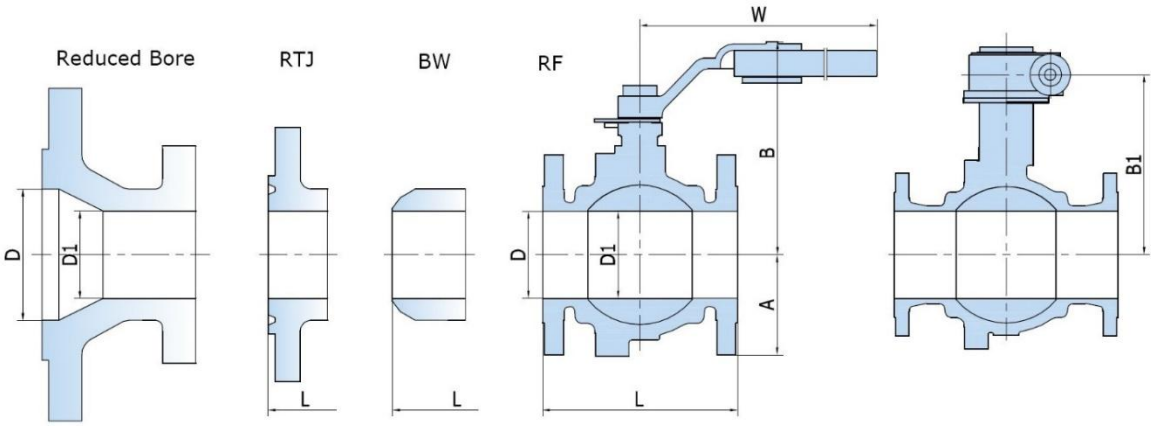

ASME CLASS 300 (PN 50) FULL BORE

Size in/mm	D	D1	L			Casting				Forging				Weight	
			RF	RTJ	BW	A	B	B1	W	A	B	B1	W	Casting (lb/kg)	Forging (lb/kg)
½ 15	0.5 12.7	0.5 12.7	5.5 140	5.94 151	5.5 140	1.77 45	3.15 80	4.89 114	7.87 200	1.77 45	3.15 80	4.33 110	7.87 200	8 3.5	9 4
¾ 20	0.75 19.1	0.75 19.1	5.98 152	6.61 168	6 152	1.97 50	3.47 85	5.31 135	7.87 200	1.97 50	3.35 85	5.11 130	7.87 200	9 4	13 6
1 25	1 25.4	1 25.4	6.5 165	7.13 181	6.5 165	2.16 55	3.54 90	6.3 160	7.87 200	2.16 55	3.54 90	6.1 155	7.87 200	12 5.3	18 8
1¼ 32	1.25 31.8	1.25 31.8	7 178	7.64 194	7 178	2.36 60	4.33 110	6.70 170	9.84 250	2.36 60	4.33 110	6.5 165	9.84 250	21 9.5	3 13.5
1½ 40	1.5 38.1	1.5 38.1	7.5 190	8.11 206	7.5 190	2.48 63	4.53 115	7.10 180	13 330	2.48 63	4.53 115	6.97 177	13 330	29 13	140 8
2 50	1.94 49	1.94 49	8.5 216	9.13 232	8.5 216	3 76	5.9 150	7.5 191	13 330	3 76	5.6 142	7.32 186	13 330	38 17	51 23
2½ 65	2.44 62	2.44 62	9.5 241	10.12 257	9.5 241	3.45 85	6.1 155	7.83 200	13 330	3.45 85	5.9 150	7.67 195	13 330	55 25	62 28
3 80	2.91 74	2.91 74	11.1 282	11.73 298	11.1 282	3.74 95	6.3 160	8.46 215	22.05 560	3.74 95	6.1 155	8.1 206	22.05 560	77 35	93 42
4 100	3.94 100	3.94 100	12 305	12.64 321	12 305	4.33 110	8.27 210	10.04 255	22.05 560	4.33 110	7.67 195	9.5 242	22.05 560	117 53	148 67
6 150	5.91 150	5.91 150	15.87 403	16.5 419	15.87 403	6.70 170	12.2 310	12.87 327	31.8 800	6.70 170	11.22 285	12.44 316	31.8 800	249 113	331 150

ASME CLASS 300 (PN 50) REDUCED BORE

Size in/mm	D	D1	L			Casting				Forging				Weight	
			RF	RTJ	BW	A	B	B1	W	A	B	B1	W	Casting (lb/kg)	Forging (lb/kg)
½ 15	0.5 12.7	0.375 9.5	4.25 108	-	4.25 108	1.77 45	3.15 80	4.89 114	7.87 200	1.77 45	3.15 80	4.33 110	7.87 200	7 3.3	9 4.2
¾ 20	0.75 19.1	0.5 12.7	4.62 117	-	4.62 117	1.97 50	3.15 80	4.89 114	7.87 200	1.97 50	3.35 85	5.11 130	7.87 200	8 3.8	11 5
1 25	1 25.4	0.75 19.1	5 127	5.5 140	5 127	2.16 55	3.47 85	5.31 135	7.87 200	2.16 55	3.54 90	6.1 155	7.87 200	10 4.5	15 7
¼ 32	1.25 31.8	1 25.4	5.5 140	6 153	5.5 140	2.36 60	3.54 90	6.3 160	7.87 200	2.36 60	4.33 110	6.5 165	9.84 250	17 7.5	20 9
1½ 40	1.5 38.1	1.25 31.8	6.5 165	7 178	6.5 165	2.48 63	4.33 110	6.70 170	9.84 250	2.48 63	4.53 115	6.97 177	13 330	20 9	24 11
2 50	1.94 49	1.5 38.1	7 178	7.5 191	7 178	3 76	4.53 115	7.10 180	13 330	3 76	5.6 142	7.32 186	13 330	33 15	44 20
2½ 65	2.44 62	1.94 49	7.5 191	8 203	7.5 191	3.45 85	5.9 150	7.5 191	13 330	3.45 85	5.9 150	7.67 195	13 330	51 23	55 25
3 80	2.91 74	1.94 49	8 203	8.5 216	8 203	3.74 95	6.1 155	7.83 200	13 330	3.74 95	6.1 155	8.1 206	13 330	71 32	77 35
4 100	3.94 100	2.91 74	9 229	9.5 242	9 229	4.33 110	6.3 160	8.46 215	13 330	4.33 110	7.67 195	9.5 242	18.11 460	106 48	128 58
6 150	5.91 150	3.94 100	15.5 394	16 407	15.5 394	6.70 170	8.27 210	10.04 255	18.11 460	6.70 170	11.22 285	12.44 316	30.3 770	187 85	238 108
8 201	8 201	5.91 150	18 457	18.5 470	18 457	6.73 175	12.2 310	12.87 327	30.3 770	6.73 175	11.22 285	12.44 316	30.3 770	297 135	419 190

1. The dimension and weights are for reference only and subject to change without notice.
2. Contact sales representative if further information is needed.

DIMENSIONS AND WEIGHTS

ASME CLASS 600 (PN 100)

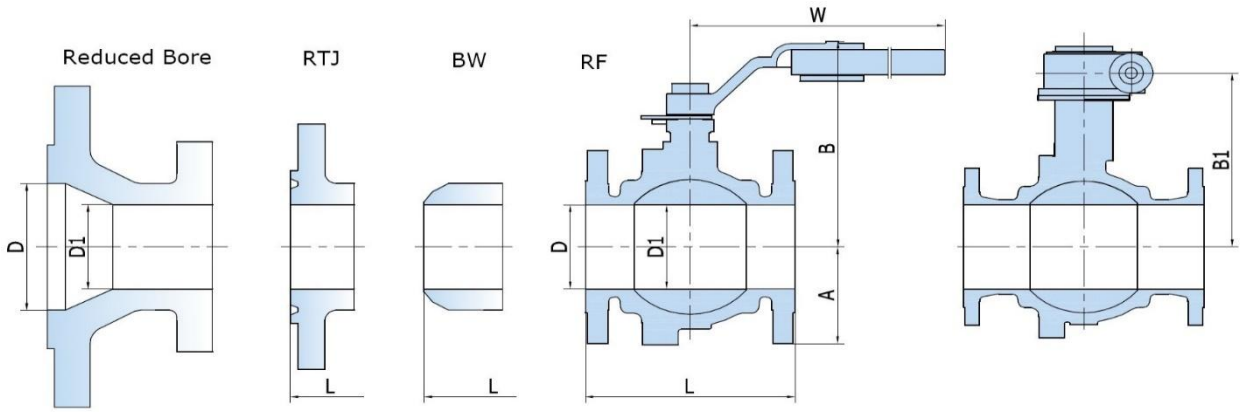

ASME CLASS 600 (PN 100) FULL BORE

Size *in/mm*	D	D1	L			Casting				Forging				Weight	
			RF	RTJ	BW	A	B	B1	W	A	B	B1	W	Casting *(lb/kg)*	Forging *(lb/kg)*
½ *15*	0.5 *12.7*	0.5 *12.7*	16.5 *65*	6.42 *163*	16.5 *65*	1.89 *48*	3.15 *80*	4.69 *119*	7.87 *200*	1.89 *48*	2.95 *75*	4.69 *119*	7.87 *200*	6 *2.8*	8 *3.8*
¾ *20*	0.75 *19.1*	0.75 *19.1*	7.48 *190*	7.48 *190*	7.48 *190*	2.28 *58*	3.35 *85*	5.51 *140*	7.87 *200*	2.28 *58*	3.15 *80*	5.51 *140*	7.87 *200*	12 *5.3*	14 *6.2*
1 *25*	1 *25.4*	1 *25.4*	8.5 *216*	8.5 *216*	8.5 *216*	2.48 *63*	3.54 *90*	6.69 *170*	7.87 *200*	2.48 *63*	3.35 *85*	6.69 *170*	7.87 *200*	18 *8*	25 *11.5*
1¼ *32*	1.25 *31.8*	1.25 *31.8*	9.02 *229*	9.02 *229*	9.02 *229*	2.87 *73*	4.33 *110*	7.09 *180*	11.81 *300*	2.87 *73*	4.13 *105*	7.09 *180*	11.81 *300*	25 *11*	33 *15*
1½ *40*	1.5 *38.1*	1.5 *38.1*	9.49 *241*	9.49 *241*	9.49 *241*	3.07 *78*	4.53 *115*	7.48 *190*	13 *330*	3.07 *78*	4.33 *110*	7.48 *190*	13 *330*	230 *13.6*	40 *18*
2 *50*	1.94 *49*	1.94 *49*	11.5 *292*	11.61 *295*	11.5 *292*	3.23 *82*	5.91 *150*	7.87 *200*	13 *330*	3.23 *82*	5.71 *145*	7.87 *200*	13 *330*	42 *19*	66 *30*
2½ *65*	2.44 *62*	2.44 *62*	12.99 *330*	13.11 *333*	12.99 *330*	3.74 *95*	6.5 *165*	8.46 *215*	22.05 *560*	3.74 *95*	6.3 *160*	8.46 *215*	22.05 *560*	71 *32*	106 *48*
3 *80*	2.91 *74*	2.91 *74*	14.02 *356*	14.13 *359*	14.02 *356*	4.33 *110*	7.28 *185*	8.9 *226*	31.5 *800*	4.33 *110*	7.09 *180*	8.9 *226*	31.5 *800*	113 *51*	144 *65*

ASME CLASS 600 (PN 100) REDUCED BORE

Size *in/mm*	D	D1	L			Casting				Forging				Weight	
			RF	RTJ	BW	A	B	B1	W	A	B	B1	W	Casting *(lb/kg)*	Forging *(lb/kg)*
½ *15*	0.5 *12.7*	0.375 *9.5*	16.5 *65*	6.42 *163*	16.5 *65*	1.89 *48*	3.15 *80*	4.53 *115*	7.87 *200*	1.89 *48*	2.95 *75*	4.43 *110*	7.87 *200*	9 *4*	10 *4.5*
3/4 *20*	0.75 *19.1*	0.5 *12.7*	7.48 *190*	7.48 *190*	7.48 *190*	2.28 *58*	3.35 *85*	4.69 *119*	7.87 *200*	2.28 *58*	3.15 *80*	4.53 *115*	7.87 *200*	10 *4.5*	11 *4.8*
1 *25*	1 *25.4*	0.75 *19.1*	8.5 *216*	8.5 *216*	8.5 *216*	2.48 *63*	3.54 *90*	5.51 *140*	7.87 *200*	2.48 *63*	3.35 *85*	5.31 *135*	7.87 *200*	14 *6.5*	20 *9*
1¼ *32*	1.25 *31.8*	1 *25.4*	9.02 *229*	9.02 *229*	9.02 *229*	2.87 *73*	4.33 *110*	6.69 *170*	7.87 *200*	2.87 *73*	4.13 *105*	6.5 *165*	7.87 *200*	19 *8.5*	28 *12.5*
1½ *40*	1.5 *38.1*	1.25 *31.8*	9.49 *241*	9.49 *241*	9.49 *241*	3.07 *78*	4.53 *115*	7.09 *180*	11.81 *300*	3.07 *78*	4.33 *110*	6.89 *175*	11.81 *300*	23 *10.5*	33 *15*
2 *50*	1.94 *49*	1.5 *38.1*	11.5 *292*	11.61 *295*	11.5 *292*	3.23 *82*	5.91 *150*	7.48 *190*	13 *330*	3.23 *82*	5.71 *145*	7.28 *185*	13 *330*	35 *16*	46 *21*
2½ *65*	2.44 *62*	1.94 *49*	12.99 *330*	13.11 *333*	12.99 *330*	3.74 *95*	6.5 *165*	7.87 *200*	13 *330*	3.74 *95*	6.3 *160*	7.68 *195*	13 *330*	58 *26.5*	66 *30*
3 *80*	2.91 *74*	1.94 *49*	14.02 *356*	14.13 *359*	14.02 *356*	1.89 *48*	7.28 *185*	8.46 *215*	22.05 *560*	4.33 *110*	7.09 *180*	8.27 *210*	22.05 *560*	84 *38*	79 *36*
4 *100*	3.94 *100*	2.91 *74*	17 *432*	17.13 *435*	17 *432*	5.43 *138*	16.93 *230*	8.9 *226*	31.5 *800*	5.43 *138*	16.93 *230*	8.66 *220*	31.5 *800*	137 *62*	174 *79*

1. The dimension and weights are for reference only and subject to change without notice.
2. Contact sales representative if further information is needed.

Engineered Solutions

FLOATING BALL VALVE

DIMENSIONS AND WEIGHTS

ASME CLASS 900/1500 (PN 150/2500)

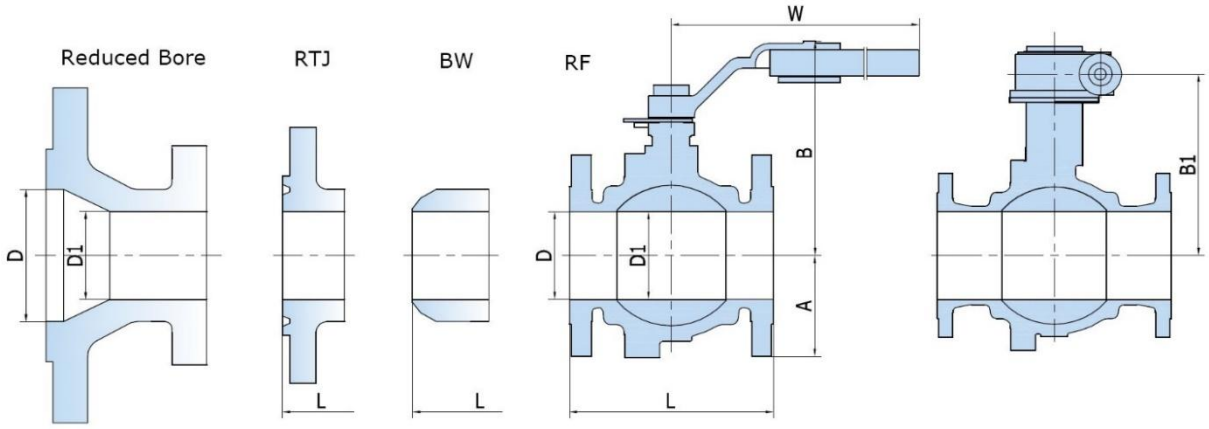

ASME CLASS 900/1500 (PN 150/250) FULL BORE

Size *in/mm*	D	D1	L			Casting				Forging				Weight	
			RF	RTJ	BW	A	B	B1	W	A	B	B1	W	Casting *(lb/kg)*	Forging *(lb/kg)*
½ *15*	0.5 *12.7*	0.5 *12.7*	8.5 *216*	8.5 *216*	8.5 *216*	-	-	-	-	2.36 *60*	2.76 *70*	-	7.87 *200*	-	20 *9*
¾ *20*	0.75 *19.1*	0.75 *19.1*	9.02 *229*	9.02 *229*	9.02 *229*	-	-	-	-	2.56 *65*	3.03 *77*	-	9.84 *250*	-	24 *11*
1 *25*	1 *25.4*	1 *25.4*	10 *254*	10 *254*	10 *254*	-	-	-	-	2.95 *75*	3.35 *85*	-	9.84 *250*	-	42 *19*
1¼ *32*	1.25 *31.8*	1.25 *31.8*	10.98 *279*	10.98 *279*	10.98 *279*	-	-	-	-	3.15 *80*	3.74 *95*	-	13 *330*	-	59 *27*
1½ *40*	1.5 *38.1*	1.5 *38.1*	12.01 *305*	12.01 *305*	12.01 *305*	-	-	-	-	3.54 *90*	4.33 *110*	-	19.69 *500*	-	71 *32*
2 *50*	1.94 *49*	1.94 *49*	14.49 *368*	14.61 *371*	14.49 *368*	-	-	-	-	4.25 *108*	5.31 *135*	-	24 *610*	-	121 *55*

ASME CLASS 900/1500 (PN 150/250) REDUCED BORE

Size *in/mm*	D	D1	L			Casting				Forging				Weight	
			RF	RTJ	BW	A	B	B1	W	A	B	B1	W	Casting *(lb/kg)*	Forging *(lb/kg)*
½ *15*	0.5 *12.7*	0.375 *9.5*	8.5 *216*	8.5 *216*	8.5 *216*	-	-	-	-	2.36 *60*	2.76 *70*	-	7.87 *200*	-	16.5 *7.5*
¾ *20*	0.75 *19.1*	0.5 *12.7*	9.02 *229*	9.02 *229*	9.02 *229*	-	-	-	-	2.36 *60*	2.76 *70*	-	7.87 *200*	-	20 *9*
1 *25*	1 *25.4*	0.75 *19.1*	10 *254*	10 *254*	10 *254*	-	-	-	-	2.56 *65*	3.03 *77*	-	9.84 *250*	-	29 *13*
1¼ *32*	1.25 *31.8*	1 *25.4*	10.98 *279*	10.98 *279*	10.98 *279*	-	-	-	-	2.95 *75*	3.35 *85*	-	9.84 *250*	-	40 *18*
1½ *40*	1.5 *38.1*	1.25 *31.8*	12.01 *305*	12.01 *305*	12.01 *305*	-	-	-	-	3.15 *80*	3.74 *95*	-	13 *330*	-	53 *24*
2 *50*	1.94 *49*	1.5 *38.1*	14.49 *368*	14.61 *371*	14.49 *368*	-	-	-	-	3.54 *90*	4.33 *110*	-	19.69 *500*	-	95 *43*
2½ *65*	2.44 *62*	1.94 *49*	16.5 *419*	16.61 *422*	16.5 *419*	-	-	-	-	4.25 *108*	5.31 *135*		24 *610*	-	137 *62*

1. The dimension and weights are for reference only and subject to change without notice.
2. Contact sales representative if further information is needed.

FLOATING BALL VALVE

OVERVIEW

3-PIECE SPLIT BODY

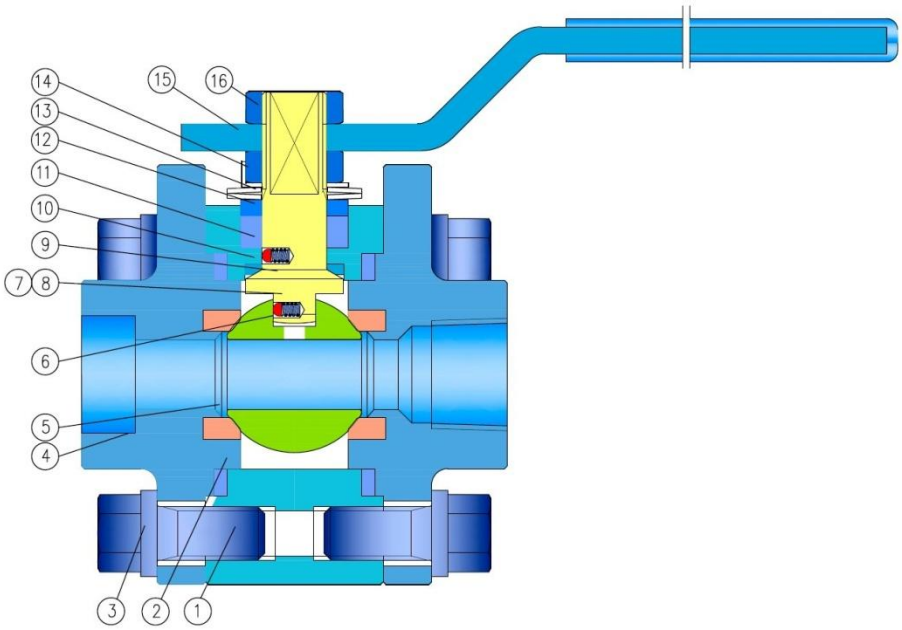

PART LIST

1. Body
2. Gasket
3. Bolt
4. Closure
5. Seat
6. Ball
7. Anti-static Spring
8. Anti-static Ball
09. Stem
10. Thrust Washer
11. Packing
12. Packing Gland
13. Belleville Spring
14. Stopper Washer
15. Lever
16. Nut

Floating Ball with 3 Piece design is provided in forged material in long pattern and short pattern.

Short Pattern: Mainly applies for soft seated with lever operation.

Long Pattern: Can be applied for metal seat, stem extension, bare stem, or actuated ball valves, or full welded and butt welded.

STANDARDS

Design & manufacture	API 608, ISO 17292, ASME B16.34,
Face-to-face	MFG' STD
End Dimension	ASME B1.20.1 (NPT) ASME B16.11 (SW) ASME B16.25 (BW) Or ASME B36.10(BW)
Test & inspection	API 598
Fire safe	API 6FA, API 607
Other	NACE MR 01-75, MR 0103

TYPICAL MATERIALS

Body/Closures	(Forged)A105N, A182 F304, F304L, F316, F316L, F51, F53, F55, MONEL, A350 LF2, LF3, LF5, B462 ALLOY 20, B564 INCONEL600, INCONEL 625, HASTELLOY
Ball	A182 F304, F304L, F316, F316L, F51, F53, F55, MONEL, B462 ALLOY 20, B564 INCONEL600, INCONEL 625, HASTELLOY, SS+TCC, SS+NI60, SS+STL
Seal Ring	PTFE, RPTFE, PCTFE, Devlon, PEEK
Stem	F316, F51, 17-4PH, XM-19
Packing	Graphite, PTFE, RPTFE
O-ring	Viton, HNBR, FVMQ, AFLAS

Engineered Solutions

DIMENSIONS AND WEIGHT（SW/ NPT - Short Pattern） *ASME CLASS 800/ CLASS1500*

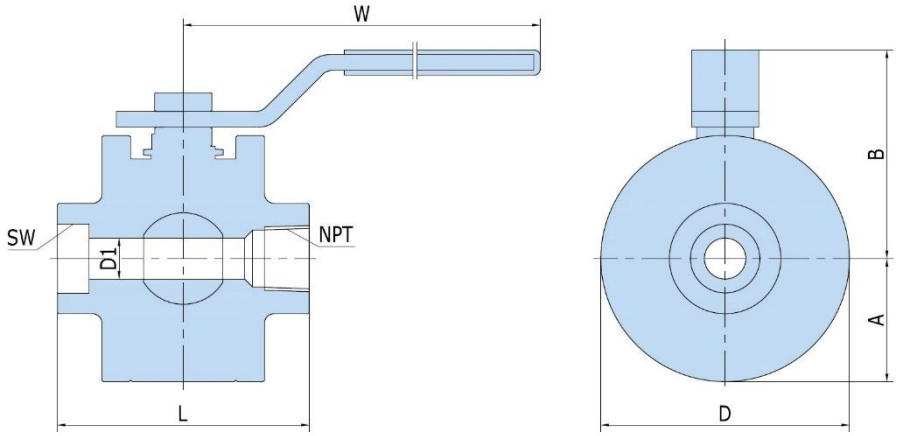

ASME CLASS 800 (PN136)

Size *in/mm*	D1	L	Forging				Weight
		SW / NPT	A	B	D	W	SW / NPT *(lb/kg)*
½ *15*	0.5 *12.7*	3.11 *79*	1.57 *40*	2.56 *65*	3.15 *80*	7.87 *200*	6.5 *2.9*
¾ *20*	0.75 *19.1*	3.62 *92*	1.67 *42.5*	3.03 *77*	3.35 *85*	7.87 *200*	8.6 *3.9*
1 *25*	1 *25.4*	4.37 *111*	1.87 *47*	3.35 *85*	3.7 *94*	7.87 *200*	12 *5.6*
1¼ *32*	1.25 *31.8*	5.51 *140*	2.2 *56*	3.74 *95*	4.33 *110*	11.81 *300*	20 *9*
1½ *40*	1.5 *38.1*	5.51 *140*	2.42 *61.5*	4.33 *110*	4.48 *123*	11.81 *300*	26 *11.8*
2 *50*	1.94 *49*	5.98 *152*	2.93 *74.5*	5.31 *135*	5.87 *149*	13 *330*	41 *18.5*

1. Face to Face dimension for pressure ratingCL150~CL600 SW/NPT ball valve can refer to the dimension specified on table above for CL800.
2. The face to face and outline dimension for reduce ball valve are the same as full bore ball valve, just the flow port dimension has been reduced.
3. Short Pattern only applies to the SW/NPT soft seat ball valve with lever operation.

ASME CLASS1500 (PN 250)

Size *in/mm*	D	L	Forging				Weight
		SW / NPT	A	B	D	W	SW / NPT *(lb/kg)*
½ *15*	0.5 *12.7*	3.62 *92*	1.65 *42*	3.11 *79*	3.31 *84*	7.87 *200*	9 *3.9*
¾ *20*	0.75 *19.1*	4.37 *111*	1.93 *49*	3.46 *88*	3.74 *95*	9.84 *250*	13 *5.9*
1 *25*	1 *25.4*	5 *127*	2.09 *53*	3.54 *90*	4.17 *106*	9.84 *250*	18 *8.3*
1¼ *32*	1.25 *31.8*	5.51 *140*	2.44 *62*	4.53 *115*	4.33 *110*	13 *330*	30 *13.5*
1½ *40*	1.5 *38.1*	5.98 *152*	2.76 *70*	5.12 *130*	5.51 *140*	19.3 *490*	38 *17*
2 *50*	1.94 *49*	7.01 *178*	3.31 *84*	5.91 *150*	6.61 *168*	24 *610*	63 *28.3*

1. The face to face and outline dimension for reduce ball valve are the same as full bore ball valve, just the flow port dimension has been reduced.
2. Short Pattern only applies to the SW/NPT soft seat ball valve with lever operation.

DIMENSIONS AND WEIGHT（SW/ NPT - Long Pattern） *ASME CLASS 800/CLASS1500*

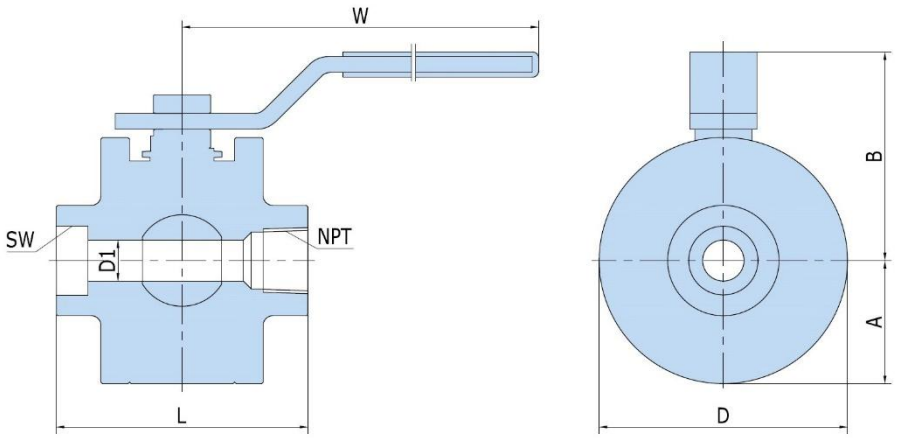

ASME CLASS 800 (PN136)

Size *in/mm*	D1	L	Forging				Weight
		SW / NPT	A	B	D	W	SW / NPT *(lb/kg)*
½ *15*	0.5 *12.7*	4.25 *108*	1.89 *48*	3.44 *87.5*	3.78 *96*	7.87 *200*	12 *5.5*
¾ *20*	0.75 *19.1*	4.61 *117*	2.07 *52.5*	3.54 *90*	4.13 *105*	7.87 *200*	13 *5.8*
1 *25*	1 *25.4*	5 *127*	2.17 *55*	3.64 *92.5*	4.33 *110*	7.87 *200*	15 *6.7*
1¼ *32*	1.25 *31.8*	5.51 *140*	2.64 *67*	5.12 *130*	5.28 *134*	11.81 *300*	29 *13*
1½ *40*	1.5 *38.1*	6.5 *165*	3.05 *77.5*	5.91 *150*	6.1 *155*	11.81 *300*	36 *16*
2 50	*1.94* 49	*7.01* 178	*3.25* 82.5	*6.69* 170	*6.5* 165	*13* 330	*51* 23

1. Face to Face dimension for pressure rating CL150~CL600 SW/NPT ball valve can refer to the dimension specified on table above for CL800.
2. The face to face and outline dimension for reduce ball valve are the same as full bore ball valve.
3. Long pattern can be applied to the ball valve with structure of metal seat, stem extension, or bare stem, or actuated ball valves, or full welded and butt welded.

ASME CLASS1500 (PN 250)

Size *in/mm*	D	L	Forging				Weight
		SW / NPT	A	B	D	W	SW / NPT *(lb/kg)*
½ *15*	0.5 *12.7*	5.51 *140*	2.24 *57*	3.74 *95*	4.49 *114*	7.87 *200*	18 *8*
¾ *20*	0.75 *19.1*	5.98 *152*	2.48 *63*	4.02 *102*	4.96 *126*	9.84 *250*	2 *11*
1 *25*	1 *25.4*	6.5 *165*	2.56 *65*	4.37 *111*	5.12 *130*	9.84 *250*	29 *13*
1¼ *32*	1.25 *31.8*	7 *178*	3.07 *78*	5.12 *130*	5.71 *145*	13 *330*	39 *17.5*
1½ *40*	1.5 *38.1*	7.48 *190*	3.43 *87*	5.91 *150*	6.3 *160*	19.3 *490*	46 *21*
2 *50*	1.94 *49*	8.5 *216*	3.54 *90*	6.69 *170*	7.09 *180*	24 *610*	83 *37.5*

1. Face to Face dimension for pressure rating CL900 SW/NPT ball valve can refer to the dimension specified on table above for CL1500.
2. The face to face and outline dimension for reduce ball valve are the same as full bore ball valve.
3. Long pattern can be applied to the ball valve with structure of metal seat, stem extension, or bare stem, or actuated ball valves, or full welded and butt welded.

Engineered Solutions

TOP MOUNTING DIMENSIONS AND TORQUE

NPS 1/2-6 (DN 15-150)

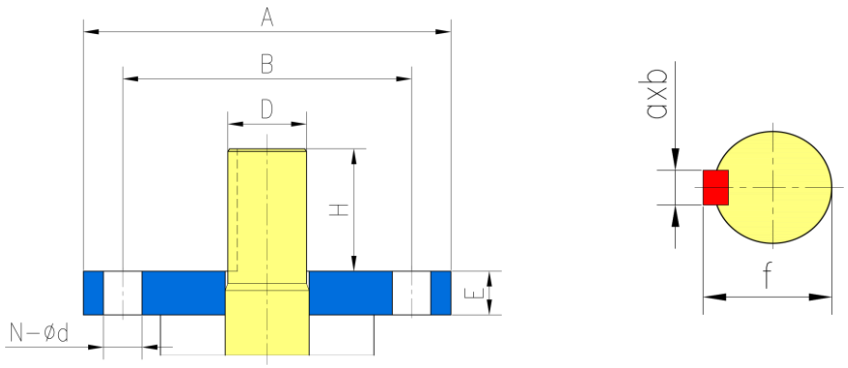

Size *in/mm*	Rating *Class/PN*	Torque[1] *ft-lb/N-m*	ISO F#	A	B	D	E	n-Φd[2]	H	Drive Key a x b	f
1/2 *15*	150 *20*	15 *20*	F04	2.13 *54*	1.65 *42*	0.47 *12*	0.2 *5*	4-Φ0.24 *4-Φ6*	0.79 *20*	0.16x 0.16 *4x 4*	0.53 *13.5*
	300 *50*	18 *25*	F04	2.13 *54*	1.65 *42*	0.47 *12*	0.2 *5*	4-Φ0.24 *4-Φ6*	0.79 *20*	0.16x 0.16 *4x 4*	0.53 *13.5*
	600 *100*	22 *30*	F05	2.56 *65*	1.97 *50*	0.47 *12*	0.2 *5*	4-Φ0.31 4-Φ8	0.79 *20*	0.16x 0.16 *4x 4*	0.53 *13.5*
	800/900 *136/150*	26 *35*	F05	2.56 *65*	1.97 *50*	0.47 *12*	0.2 *5*	4-Φ0.31 4-Φ8	0.79 *20*	0.16x 0.16 *4x 4*	0.53 *13.5*
	1500 *250*	30 *40*	F05	2.56 *65*	1.97 *50*	0.63 *16*	0.2 *5*	4-Φ0.31 4-Φ8	1.18 *30*	0.2 x 0.2 *5x 5*	0.71 *18*
	2500 *420*	37 *50*	F05	2.56 *65*	1.97 *50*	0.63 *16*	0.2 *5*	4-Φ0.31 4-Φ8	1.18 *30*	0.2 x 0.2 *5x 5*	0.71 *18*
3/4 *20*	150 *20*	22 *30*	F04	2.13 *54*	1.65 *42*	0.55 *14*	0.2 *5*	4-Φ0.24 *4-Φ6*	1 *25*	0.2 x 0.2 *5x 5*	0.63 *26*
	300 *50*	26 *35*	F04	2.13 *54*	1.65 *42*	0.55 *14*	0.2 *5*	4-Φ0.24 *4-Φ6*	1 *25*	0.2 x 0.2 *5x 5*	0.63 *26*
	600 *100*	30 *40*	F05	2.56 *65*	1.97 *50*	0.63 *16*	0.2 *5*	4-Φ0.31 4-Φ8	1.18 *30*	0.2 x 0.2 *5x 5*	0.71 *18*
	800/900 *136/150*	33 *45*	F05	2.56 *65*	1.97 *50*	0.63 *16*	0.2 *5*	4-Φ0.31 4-Φ8	1.18 *30*	0.2 x 0.2 *5x 5*	0.71 *18*
	1500 *250*	37 *50*	F05	2.56 *65*	1.97 *50*	0.79 *20*	0.2 *5*	4-Φ0.31 4-Φ8	1.18 *30*	0.24 x 0.24 *6 x 6*	0.93 *23.5*
	2500 *420*	44 *60*	F05	2.56 *65*	1.97 *50*	0.79 *20*	0.2 *5*	4-Φ0.31 4-Φ8	1.18 *30*	0.24 x 0.24 *6 x 6*	0.93 *23.5*
1 *25*	150 *20*	30 *40*	F05	2.56 *65*	1.97 *50*	0.63 *16*	0.2 *5*	4-Φ0.31 4-Φ8	1.18 *30*	0.2 x 0.2 *5x 5*	0.71 *18*
	300 *50*	37 *50*	F05	2.56 *65*	1.97 *50*	0.63 *16*	0.2 *5*	4-Φ0.31 4-Φ8	1.18 *30*	0.2 x 0.2 *5x 5*	0.71 *18*
	600 *100*	44 *60*	F05	2.56 *65*	1.97 *50*	0.63 *16*	0.2 *5*	4-Φ0.31 4-Φ8	1.18 *30*	0.2 x 0.2 *5x 5*	0.71 *18*
	800/900 *136/150*	52 *70*	F05	2.56 *65*	1.97 *50*	0.63 *16*	0.2 *5*	4-Φ0.31 4-Φ8	1.18 *30*	0.2 x 0.2 *5x 5*	0.71 *18*
	1500 *250*	59 *80*	F07	3.54 *90*	2.76 *70*	0.79 *20*	0.24 *6*	4-Φ0.39 4-Φ10	1.18 *30*	0.24 x 0.24 *6 x 6*	0.93 *23.5*
	2500 *420*	66 *90*	F10	40.2 *125*	4.92 *102*	0.94 *24*	0.24 *6*	4-Φ0.47 4-Φ12	1.57 *40*	0.31 x 0.28 *8 x 7*	1.06 *27*
1-1/4 *32*	150 *20*	37 *50*	F05	2.56 *65*	1.97 *50*	0.79 *20*	0.2 *5*	4-Φ0.31 4-Φ8	1.18 *30*	0.24 x 0.24 *6 x 6*	0.93 *23.5*
	300 *50*	44 *60*	F05	2.56 *65*	1.97 *50*	0.79 *20*	0.2 *5*	4-Φ0.31 4-Φ8	1.18 *30*	0.24 x 0.24 *6 x 6*	0.93 *23.5*
	600 *100*	74 *100*	F07	3.54 *90*	2.76 *70*	0.79 *20*	0.24 *6*	4-Φ0.39 4-Φ10	1.18 *30*	0.24 x 0.24 *6 x 6*	0.93 *23.5*
	800/900 *136/150*	111 *150*	F07	3.54 *90*	2.76 *70*	0.79 *20*	0.24 *6*	4-Φ0.39 4-Φ10	1.18 *30*	0.24 x 0.24 *6 x 6*	0.93 *23.5*
	1500 *250*	148 *200*	F10	40.2 *125*	4.92 *102*	0.94 *24*	0.24 *6*	4-Φ0.47 4-Φ12	1.57 *40*	0.31 x 0.28 *8 x 7*	1.06 *27*

TOP MOUNTING DIMENSIONS AND TORQUE

NPS 1/2-6 (DN 15-150)

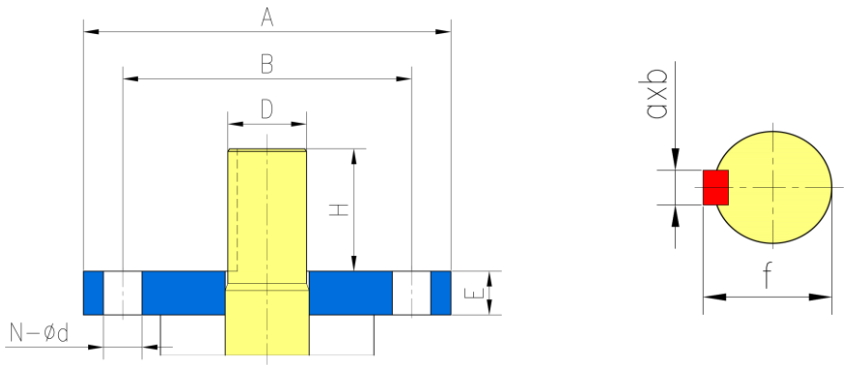

Size *in/mm*	Rating *Class/PN*	Torque[1] *ft-lb/N-m*	ISO F#	A	B	D	E	n-Φd[2]	H	Drive Key a x b	f
1-1/2 *40*	150 *20*	37 *50*	F05	2.56 *65*	1.97 *50*	0.79 *20*	0.2 *5*	4-Φ0.31 4-Φ8	1.18 *30*	0.24 x 0.24 *6 x 6*	0.93 *23.5*
	300 *50*	44 *60*	F05	2.56 *65*	1.97 *50*	0.79 *20*	0.2 *5*	4-Φ0.31 4-Φ8	1.18 *30*	0.24 x 0.24 *6 x 6*	0.93 *23.5*
	600 *100*	74 *100*	F07	3.54 *90*	2.76 *70*	0.79 *20*	0.24 *6*	4-Φ0.39 4-Φ10	1.18 *30*	0.24 x 0.24 *6 x 6*	0.93 *23.5*
	800/900 *136/150*	111 *150*	F07	3.54 *90*	2.76 *70*	0.79 *20*	0.24 *6*	4-Φ0.39 4-Φ10	1.18 *30*	0.24 x 0.24 *6 x 6*	0.93 *23.5*
	1500 *250*	148 *200*	F10	40.2 *125*	4.92 *102*	0.94 *24*	0.24 *6*	4-Φ0.47 4-Φ12	1.57 *40*	0.31 x 0.28 *8 x 7*	1.06 *27*
2 *50*	150 *20*	44 *60*	F10	40.2 *125*	4.92 *102*	0.94 *24*	0.24 *6*	4-Φ0.47 4-Φ12	1.57 *40*	0.31 x 0.28 *8 x 7*	1.06 *27*
	300 *50*	52 *70*	F10	40.2 *125*	4.92 *102*	0.94 *24*	0.24 *6*	4-Φ0.47 4-Φ12	1.57 *40*	0.31 x 0.28 *8 x 7*	1.06 *27*
	600 *100*	89 *120*	F10	40.2 *125*	4.92 *102*	0.94 *24*	0.24 *6*	4-Φ0.47 4-Φ12	1.57 *40*	0.31 x 0.28 *8 x 7*	1.06 *27*
	800/900 *136/150*	148 *200*	F10	40.2 *125*	4.92 *102*	0.94 *24*	0.24 *6*	4-Φ0.47 4-Φ12	1.57 *40*	0.31 x 0.28 *8 x 7*	1.06 *27*
	1500 *250*	184 *250*	F12	5.91 *150*	4.92 *125*	1.1 *28*	0.31 *8*	4-Φ0.55 4-Φ14	1.77 *45*	0.31 x 0.28 *8 x 7*	1.22 *31*
2-1/2 *65*	150 *20*	59 *80*	F10	40.2 *125*	4.92 *102*	0.94 *24*	0.24 *6*	4-Φ0.47 4-Φ12	1.57 *40*	0.31 x 0.28 *8 x 7*	1.06 *27*
	300 *50*	96 *130*	F10	40.2 *125*	4.92 *102*	0.94 *24*	0.24 *6*	4-Φ0.47 4-Φ12	1.57 *40*	0.31 x 0.28 *8 x 7*	1.06 *27*
	600 *100*	148 *200*	F10	40.2 *125*	4.92 *102*	0.94 *24*	0.24 *6*	4-Φ0.47 4-Φ12	1.57 *40*	0.31 x 0.28 *8 x 7*	1.06 *27*
3 *80*	150 *20*	111 *150*	F10	40.2 *125*	4.92 *102*	0.94 *24*	0.24 *6*	4-Φ0.47 4-Φ12	1.57 *40*	0.31 x 0.28 *8 x 7*	1.06 *27*
	300 *50*	148 *200*	F12	5.91 *150*	4.92 *125*	1.1 *28*	0.31 *8*	4-Φ0.55 4-Φ14	1.77 *45*	0.31 x 0.28 *8 x 7*	1.22 *31*
	600 *100*	184 *250*	F12	5.91 *150*	4.92 *125*	1.1 *28*	0.31 *8*	4-Φ0.55 4-Φ14	1.77 *45*	0.31 x 0.28 *8 x 7*	1.22 *31*
4 *100*	150 *20*	148 *200*	F12	5.91 *150*	4.92 *125*	1.1 *28*	0.31 *8*	4-Φ0.55 4-Φ14	1.77 *45*	0.31 x 0.28 *8 x 7*	1.22 *31*
	300 *50*	258 *350*	F12	5.91 *150*	4.92 *125*	1.42 *36*	0.31 *8*	4-Φ0.55 4-Φ14	2.36 *60*	0.39 x 0.31 *10 x 8*	1.54 *39*
6 *150*	150 *20*	332 *450*	F12	5.91 *150*	4.92 *125*	1.42 *36*	0.31 *8*	4-Φ0.55 4-Φ14	2.36 *60*	0.39 x 0.31 *10 x 8*	1.54 *39*
	300 *50*	516 *700*	F12	5.91 *150*	4.92 *125*	1.57 *40*	0.31 *8*	4-Φ0.55 4-Φ14	2.36 *60*	0.47 x 0.31 *12 x 8*	1.69 *43*

(1) Torque doesn't include safety factor. The torque is based on seats of PTFE/RPTFE (Class 150 – 300), Devlon (Class 900 – 1500), and PEEK (Class 2500). Torque shall be as follows if other than the base seat material is selected:

PTFE/RPTFE	Devlon	PCTFE	TFM	Delrin	PPL	PEEK	Metal
Base	x 1	x 0.8	X 0.8	x 1	X 0.8	x 1.3	x 2.2

(2) Number of bolt holes and bolt hole diameter.

Engineered Solutions

SEAT AND SEAL MATERIAL

SELECTION GUIDE

Seat Material Pressure-Temperature Rating (Operating)

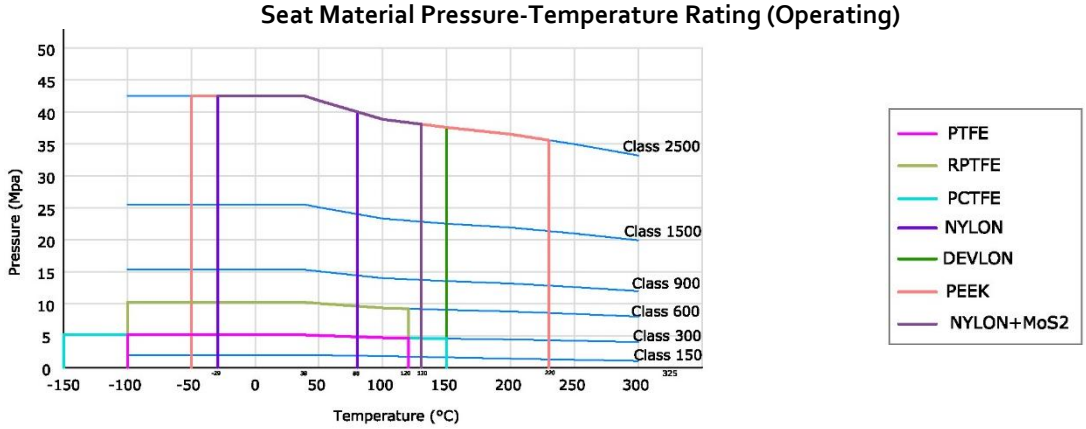

SEAT MATERIALS

Material Name	Description	Operating Temperature	Operating Pressure	Service Application
PTFE	Virgin PTFE is the most widely used sealing material with excellent characteristics suitable for most services. It has excellent chemical resistance throughout valve industries and low coefficient of frication.	-112°F – 248°F *-80°C– 120°C*	Class 150 *PN 20*	General chemicals, low pressure services.
RPTFE	RPTFE (Reinforced PTFE) is typically produced by adding 15% fiber glass to virgin PTFE. It has better pressure-temperature properties than virgin PTFE, better resistance to wear and deformation under load. **NOT to be used in hydrofluroic acid**	-112°F – 248°F *-80°C– 120°C*	Class 150 – 600 *PN 20 – 100*	For low and medium pressure services.
PCTFE	PCTFE is a homopolymer of chlorotrifluoroethylene, featuring high compressive strength and low deformation under load.	-320°F – 248°F -196°C– 120°C	Class 150 – 300 *PN 20 – 50*	For low temperature low pressure services.
Nylon 6	Nylon is a common seat material for Class 600 valves. It is highly resistance to many chemicals and abrasions, and can be used in air, oil and other gas media. **It is NOT suitable for strong oxidization agents.**	-22°F – 176°F *-30°C– 80°C*	Class 150 –1500 *PN 20 –250*	For high pressure, low temperature services.
Devlon®	Devlon® is a high molecular weight polyamide that is specifically tailored for high temperature/pressure applications in the offshore oil and gas sector. It is low moisture absorption.	-50°F – 302°F *-46°C– 150°C*	Class 150 –1500 *PN 20 –250*	For high pressure high temperature offshore services.
Nylon+MoS2	Molon (Nylon+MoS2) is a modified Nylon, the characteristics are similar to Devlon with it is cheaper than Devlon.	-20°F – 266°F *-29°C– 130°C*	Class 150 – 1500 *PN 20 – 250*	For high pressure, low temperature services.
PEEK	PEEK is a high performance engineered thermoplastic. It is excellent in water/chemical resistance andit is unaffected by continuous exposure to hot water/steam	-148°F – 500°F *-100°C– 260°C*	Class 150 – 2500 *PN 20 – 420*	For high pressure high temperature services.
PPL	PPL (Polyparaphenylene) is an excellent seat material with low coefficient of friction, highly resistant to pressure and temperature.	-50°F –482°F *-46°C– 250°C*	Class 150 – 300 *PN 20 – 50*	For high temperature low pressure services.
Delrin®	Delrin® (Acetal Resin) possesses high tensile strength, creep resistance and toughness. It exhibits low moisture absorption. It is chemically resistant to hydrocarbons, solvents and neutral chemicals.**DO NOT use it on oxygen service or steam.**	-50°F –194°F *-46°C– 90°C*	Class 150 – 600 *PN 20 –100*	For extreme pressure services.
TFM	TFM (modified PTFE) is a chemically modified PTFE that offers enhanced properties while retaining all the proven advantages of a conventional PTFE.	-112°F – 320°F *-80°C– 160°C*	Class 150 *PN 20*	For services requiring high purity.
Metal	Metal (typically stellite) seats are used in severe conditions where flashing, hydraulic shock, abrasive media or trapped metal may exist in the line.	Varies	Varies	For severe services.

O-RINGMATERIALS

Material Name	Description	Operating Temperature	Operating Pressure
NBR	Buna-N (NBR) is an all purpose polymer with good resistance to water, solvents, oil and hydraulic fluids.	-50°F –176°F *-46°C– 80°C*	Class 150 – 600 *PN 20 –100*
HNBR	HNBR (Hydrogenated NBR) has similar media stability to NBR but with significantly better heat and oxidization stability.	-67°F –338°F *-55°C– 170°C*	Class 150 – 2500 *PN 20 – 420*
Viton	Viton (fluorocarbon) is a fluorocarbon elastomer that is compatible with a broad range of chemicals. It performs well in mineral acids, salt solutions, chlorinated hydrocarbons and petroleum oils	-20°F – 400°F *-29°C– 204°C*	Class 150 – 2500 *PN 20 – 420*
EPDM	EPDM has good abrasion and tear resistance with excellent chemical resistance to a variety of acids and alkalines. It is susceptible to attack by oil, strong acids and strong alkalines and should not be used in compressed air lines.	-50°F – 302°F *-46°C– 150°C*	Class 150 – 1500 *PN 20 – 250*
FVMQ	Fluorosilcione is a silicone polymer chain with fluorinated side-chains for improved oil and fuel resistance. The mechanical and physical properties are very similar to those of silicone.	-50°F – 350°F *-46°C– 177°C*	Class 150 – 1500 *PN 20 – 250*
AFLAS®	AFLAS® is highly resistant to a wide range of chemicals	-49°F – 428°F *-29°C– 220°C*	Class 150 – 1500 *PN 20 – 250*

FLOATING BALL VALVE

VALVE FIGURE NUMBER — *HOW TO ORDER*

	Nominal Size	Valve Type	Pressure Rating	End Conn.	Construct-ion	Body Material	Trim Material	Seat or Insert	O-ring	Operation Mode
	A	B	C	D	E	F	G	H	I	J
e.g.	0 1	B A	6	R	1	C 1	1 0	R	0	L

NPS 1 Class 600 floating ball valve, RF flanged, 2-piece split body, A105 body, SS316 trim, RPTFE seat insert, No O-ring, Lever operated.

A Nominal Size

00	Special	**02**	2 (DN 50)	**07**	8 RB	**19**	20 RB	**31**	32 RB
F1	3/8 (DN 10)	**R2**	2 RB	**08**	8 (DN 200)	**20**	20 (DN 500)	**32**	32 (DN 800)
F2	1/2 (DN 15)	**F6**	2 ½ (DN 65)	**09**	10 RB	**21**	22 RB	**33**	34 RB
0R	1/2 RB	**3R**	2 ½ RB	**10**	10 (DN 250)	**22**	22 (DN 550)	**34**	34 (DN 850)
F3	3/4 (DN 20)	**03**	3 (DN 80)	**11**	12 RB	**23**	24 RB	**35**	36 RB
R0	3/4 RB	**R3**	3 RB	**12**	12 (DN 300	**24**	24 (DN 600)	**36**	36 (DN 900)
01	1 (DN 25)	**04**	4 (DN 100)	**13**	14 RB	**25**	26 RB	**37**	38 RB
R1	1 RB	**R4**	4 RB	**14**	14 (DN 350)	**26**	26 (DN 650)	**38**	38 (DN 950)
F4	1 ¼ (DN 32)	**05**	5 (DN 125)	**15**	16 RB	**27**	28 RB	**39**	40 RB
1R	1 ¼ RB	**R5**	5 RB	**16**	16 (DN 400)	**28**	28 (DN 700)	**40**	40 (DN 1000)
F5	1 ½ (DN 40)	**06**	6 (DN 150)	**17**	18 RB	**29**	30 RB	**41**	42 RB
2R	1 ½ RB	**R6**	6 RB	**18**	18 (DN 450)	**30**	30 (DN 750)	**...**	More as such

B Valve Type

BA	Ball Valve

C Pressure Rating

0	Special	**7**	Class 2500
1	Class 150	**9**	Class 900
3	Class 300	**8**	Class 800
5	Class 1500	**2**	Class 125
6	Class 600	**4**	Class 400

D End Connection

X	Special	**B**	Butt-Weld (BW)
R	RF Flanged	**S**	Socket-Weld (SW)
J	RTJ Flanged	**W**	Wafer
F	FF Flanged	**L**	Lug
T	Threaded		

E Construction

0	Special
1	2PC Body Floating
2	3PC Body Floating
5	Welded Body Floating

F Body Material

X0	Special	**M9**	A182 F22 CL 3	**L5**	A350 LF3	**S6**	A351 CF8M
C1	A105	**M0**	A217 WC9	**L6**	A352 LC3	**S7**	A182 F316L
C2	A216 WCA	**E1**	A182 F5	**L7**	A350 LF5	**S8**	A351 CF3M
C4	A216 WCB	**E2**	A217 C5	**L8**	A352 LCB	**S9**	A182 F347
C6	A216 WCC	**E4**	A217 C6	**L9**	A350 LF6	**S0**	A351 C F8C
M1	A182 F1	**E5**	A182 F9	**LA**	A350 LF9	**D1**	A182 F51
M2	A217 WC1	**E6**	A217 C12	**LB**	A352 LC9	**D2**	A995 4A
M3	A182 F2	**E7**	A182 F91	**LD**	A352 LCC	**D3**	A182 F53
M4	A217 WC4	**E8**	A217 C12A	**S1**	A182 F304	**D4**	A995 5A
M5	A182 F12 CL 2	**L1**	A350 LF1	**S2**	A351 CF8	**D5**	A182 F55
M6	A217 WC5	**L2**	A352 LCA	**S3**	A182 F304L	**D6**	A995 6A
M7	A182 F11 CL 2	**L3**	A350 LF2	**S4**	A351 CF3		
M8	A217 WC6	**L4**	A352 LC2	**S5**	A182 F316		

G Trim Material

00	Special	**25**	F53/F53/F53	**41**	A105+Ni60/A105+Ni55/4140+ENP
01	F6a/F6a/410	**26**	A105+ENP/A105+ENP/F316	**42**	A105+Ni60/A105+Ni60/17-4PH
02	304/304/304	**27**	304+ENP/304+ENP/304+ENP	**44**	Inconel 625/Inconel 625/Inconel 625
09	Monel/Monel/Monel	**28**	Inconel 625/Inconel 625/F316	**45**	316+ENP/316+ENP/F316
10	316/316/316	**29**	A105+ENP/A105+ENP/4140+ENP	**46**	316+ENP/316+ENP/F316+ENP
13	Alloy 20/Alloy 20/Alloy 20	**30**	A105+ENP/A105+ENP/A105+ENP	**47**	316+Ni60/316+Ni55/17-4PH
19	A105+ENP/A105+ENP/F6a	**31**	316/316/17-4PH	**48**	316L+Ni60/316L+Ni55/17-4PH
20	304L/304L/304L	**36**	LF2+ENP/LF2+ENP/F6a	**49**	316+Ni60/316+Ni55/4140+ENP
21	316L/316L/316L	**37**	A105+TCC/A105+TCC/17-4PH	**50**	316L+Ni60/316L+Ni55/4140+ENP
22	F321/F321/F321	**38**	A105+TCC/A105+TCC/4140+ENP		
23	F55/F55/F55	**39**	A105+TCC/A105+TCC/F51		
24	F51/F51/F51	**40**	A105+ENP/A105+ENP/17-4PH		

Engineered Solutions

VALVE FIGURE NUMBER (CONT'D)

HOW TO ORDER

	Nominal Size	Valve Type	Pressure Rating	End Conn.	Construct-ion	Body Material	Trim Material	Seat or Insert	O-ring	Operation Mode
	A	B	C	D	E	F	G	H	I	J
e.g.	0 1	B A	6	R	1	C 1	1 0	R	0	L

NPS 1 Class 600 floating ball valve, RF flanged, 2-piece split body, A105 body, SS316 trim, RPTFE seat insert, No O-ring, Lever operated.

H Seat or Seat Insert

X	Special	M	Metal
T	PTFE	O	Molon
R	RPTFE	E	EPDM
N	Nylon	L	PPL
V	Viton	A	Delrin
Q	TFM		
D	Devlon		
P	PEEK		
C	PCTFE		
H	HNBR		

I O-Ring

0	None
1	Viton
2	Teflon
3	HNBR
4	NBR
5	Special
6	EPDM
7	FVMQ
8	FFKM
9	AFLAS

J Operation

B	Bare Stem
L	Lever
G	Gearbox
P	Pneumatic
E	Electric
C	Gear w/ Chain
N	Pneumatic-Hydraulic
S	Solid Lever
D	Lever with locking device
R	Solid lever with locking device

HOW THE FIGURE NUMBER SYSTEM WORKS

Introduction. Figure number system uses a code consisting 14 digits of letters and numbers to represent the specification of a valve of certain specification. Among 14 digits, they are separated into 10 groups identified by letters from A to J. Each group represents a parameter of a valve, together they contain almost all the essential parameters of the valve.

Uses. Using the figure number system to generate a code is easy. Under each group, the code is shown on the left while on the right is the meaning of the code. Start by selecting a code from group A, through group J. If the specification of the valve is not listed, select the code for "Special ". The total length of the figure number shall be exactly 14 digits.

Cautions. It is advised that you have as detailed the specification as possible to generate a figure number, which means eliminating "Specials". If you don't have enough specification or information about the valve you are ordering, or you're not sure how to use the system to generate a figure number, contact one of our sales representatives for help.

Note: FBV reserves the right to make any modifications without notice.

Offshore

Pipeline

Engineered Solutions®

Onshore

Refinery

IMPORTANT NOTICE

- All dimensions in inches not listed in standards are converted from millimeters. Weights in lbs (pounds) are converted from kilograms.
- Data listed in the catalog, including dimensions, weights, specifications and other valve related data are intended to provide general information and guidance only.
- FBV Inc. assumes no responsibility for errors or inadequacy relevant to any information provided in this catalog. Any information provided in this catalog is subject to change without notice.

Engineered Solutions®

2121 Brittmoore Rd Suite 4000
Houston, TX 77043 USA

T 832-203-5459
F 832-203-5461

E sales@fbvalve.com

www.fbvalve.com

©FBV Inc. All rights reserved.