FBV INC.®
Engineered Solutions

GLOBE VALVE

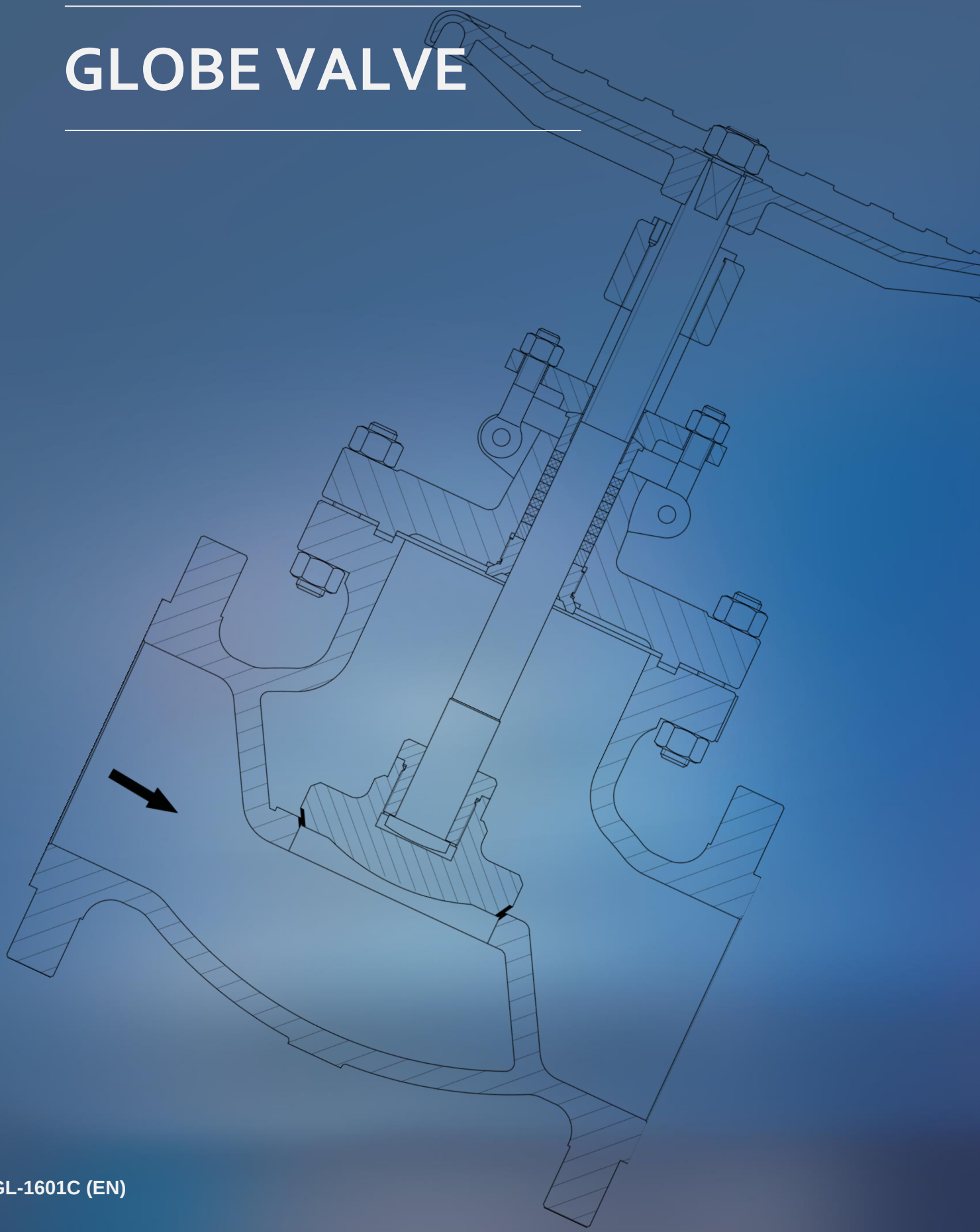

GL-1601C (EN)

ABOUT US

FBV Inc. is an ISO 9001 certified company specializing in manufacturing industrial valves including ball valves, gate valves, globe valves, check valves, plug valves and butterfly valves in carbon steel, stainless steel, duplex stainless and alloy materials. Our products conform to the latest industry standards in accordance to ANSI, ASME and API.

FBV today has over 600,000 square feet of manufacturing facilities. Through its conviction to provide only the finest quality products and services to match the need of our customers, FBV has now established itself as a serious player in the valve business.

FBV INC has sold worldwide in North America, Europe, South America, South Asia, Africa and the Middle East. We consider product quality and customer satisfaction as our highest priority. We look forward to new customer relationships by providing value, quality, customer service, honesty, integrity and the commitment to maintain product consistency with each and every order.

MISSIONSTATEMENT

We at FBV, Inc. commit to taking ACTION:

- Adopt the latest technology to take the product quality to the next level;
- Consistently provide on-time services to our customers;
- Train and develop talented people with strong work ethics to deliver effective performance;
- Improve and enhance engineering designs to ensure product performance;
- Optimize management systems and increase productivity;
- Never forget our customer and employee needs.

Engineered Solutions®

GLOBE VALVE

TABLE OF INDEX	*PAGE*

Introduction, *Features*	*3*
Scope of Products	*4*
Overview Globe Valve (Bolted Bonnet)	*5*
Dimensions and Weights	6
Class 150 (PN 20)	*6*
Class 300(PN 50)	*7*
Class 600(PN 100)	*8*
Class 900(PN 150)	*9*
Class 1500(PN 250)	*10*
Overview Globe Valve (Pressure Seal Bonnet)	*11*
Dimensions and Weights	*12*
Class 900 (PN 150)	*12*
Class 1500 (PN 150)	*13*
Class 2500 (PN 250)	*14*
Valve Figure Number, *How To Order*	*15-16*

This page is intentionally left blank.

INTRODUCTION

FBV cast globe valve offers T type body by default with rising stem and hand wheel. It blocks the flow of pipeline through the rotation and lifting of hand wheel as well as stem to drive the lift of disc. The globe valve has the feature of long service lift since there is no relative friction between disc and body sealing surface.

Bolted bonnet, pressure bonnet, bellow seal bonnet, high/low temperature extended bonnet and ISO 15848 fugitive emission designed valves are available upon different request of services.

Design of Disc

Single disc is normally adopted on cast globe valve, the medium flows from the bottom to the top; double disc is just applied while larger pressure difference or bigger size of valve, the medium flows from top to the bottom.

Plug type disc can be provided upon request.

Design of Seat

FBV cast globe valve is defaulted by non-renewable body seat, renewable seat is provided upon request only.

Design of Body -Bonnet Connection

Bolted bonnet is normally applied on CL150~CL900, body seal is defaulted by gasket and RTJ ring; Pressure seal bonnet is applied on CL1500~CL2500 with pressure seal ring for body seal.

Design of Packing

By default graphite packing is used, PTFE packing can be used on corrosive media. API 622 fugitive emission packing will be used upon request.

Design of Backseat

Renewable back seat is applied on all carbon steel and low alloy steel valve, however, body back seat is only applied for stainless steel valve.

Design of Actuation

Hand wheel and gear box are normally designed for cast globe valve based on different size and pressure rating; Electric, pneumatic or Chain wheel operation can be provided upon request.

SCOPE OF PRODUCTS

Globe Valve

Legends: **A** –Available in Bolt Bonnet
B–Available in Pressure Seal Bonnet

Size in/mm	Class 150 PN 20	Class 300 PN 50	Class 600 PN 100	Class 900 PN 150	Class 1500 PN 250	Class 2500 PN 420
2 *50*	A	A	A	A, B	A, B	A, B
2 1/2 *65*	A	A	A	A, B	A, B	A, B
3 *80*	A	A	A	A, B	A, B	A, B
4 *100*	A,	A,	A,	A, B	A, B	A, B
6 *150*	A	A	A	A, B	A, B	A, B
8 *200*	A	A	A	A, B	A, B	A, B
10 *250*	A	A	A	A, B	A, B	A, B
12 *300*	A	A	A	A, B	A, B	A, B
14 *350*	A	A	A	A, B	A, B	
16 *400*	A	A	A	A, B	A, B	
18 *450*	A	A	A	A, B		
20 *500*	A	A	A	A, B		
22 *550*	A	A				
24 *600*	A	A				

1.The sizes listed above are normal diameters. Contact our sales representative if any other dimensions are requested.

OVERVIEW (Bolted Bonnet)

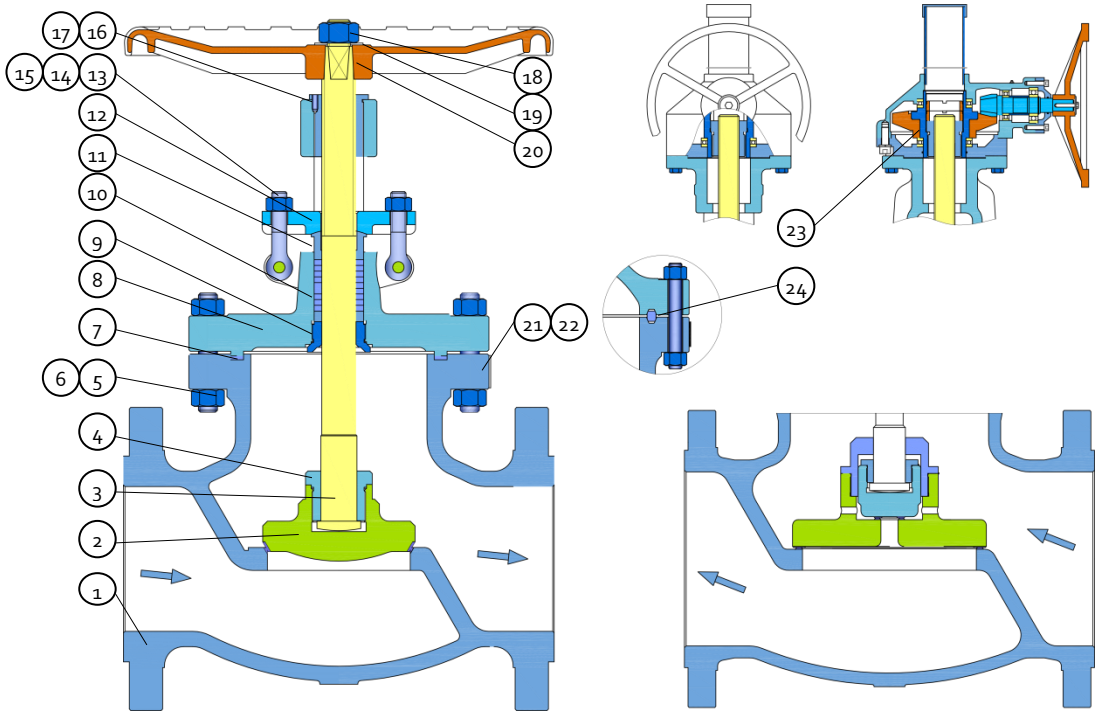

Single disc Type

Double disc Type

Part List

1	Body	7	Gasket	13	Eye Bolt	19	Washer
2	Disc	8	Bonnet	14	Nut	20	Handwheel
3	Stem	9	Backseat	15	Pin	21	Rivet
4	Sleeve	10	Packing	16	Stem Nut	22	Nameplate
5	Stud	11	Gland	17	Handwheel Nut	23	Gear
6	Nut	12	Gland Flange	18	Nut	24	Octagonal Ring

Standards

Design & Manufacture	BS 1873, API 623, ASME B16.34	
Face-to-face	ASME B16.10	
End Dimension	ASME B16.5 (RF, RTJ), ASMEB16.47(RF,RTJ) ASME B16.25 (BW)	
Test & Inspection	API 598	
Typical Materials	Body, Bonnet,Disc	(Casting): A216 WCB, A351 CF3, CF8, CF3M, CF8M, A995 4A, 5A, A352 LCB, LCC, LC2
		(Forging): A105, A350 LF2, LF3, LF5, A182 F304, F304L, F316, F316L, F51, F53, F5,F11,F22,F91, Monel, Inconel, Hastelloy
	Stem	A182 F6a, F304, F304L, F316, F316L, F51, F53,F55 Monel, Inconel, Hastelloy

DIMENSIONS AND WEIGHTS (Bolted Bonnet) *ASME CLASS 150 (PN 20)*

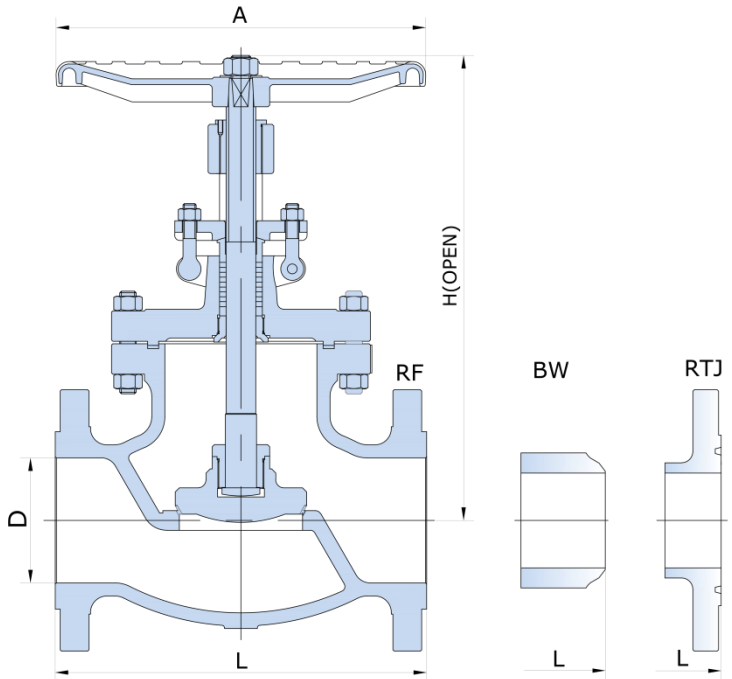

ASME CLASS 150 (PN 20)

Size *in/mm*	D	L			H	W	Weight
		RF	RTJ	BW			RF/BW *(lb/kg)*
2 *50*	2 *51*	*8* *203*	*8.5* *216*	*8* *203*	*14.3* *363*	*7.87* *200*	*37/34* *17/15.5*
2 ½ *65*	2.5 *64*	*8.5* *216*	*9* *229*	*8.5* *216*	*15.55* *395*	*9.84* *250*	*53/48* *24/22*
3 *80*	3 *76*	*9.5* *241*	*10* *254*	*9.5* *241*	*16.65* *423*	*9.84* *250*	*75/68* *34/31*
4 *100*	4 *100*	*11.5* *292*	*12* *305*	*11.5* *292*	*19* *483*	*11.81* *300*	*104/95* *47/43*
5 *125*	5 *125*	*14* *356*	*14.53* *369*	*14* *356*	*20.67* *525*	*15.75* *400*	*154/141* *70/64*
6 *150*	6 *150*	*16* *406*	*16.5* *419*	*16* *406*	*22.52* *572*	*15.75* *400*	*187/172* *85/78*
8 *200*	8 *203*	*19.5* *495*	*20* *508*	*19.5* *495*	*26.65* *677*	*17.72* *450*	*275/220* *125/110*
10 *250*	10 *250*	*24.5* *622*	*25* *635*	*24.5* *622*	*32.87* *835*	*19.69* *500*	*557/524* *253/238*
12 *300*	12 *305*	*27.5* *698*	*28* *711*	*27.5* *698*	*39.17* *995*	*23.62* *600*	*802/753* *364/342*
14 *350*	14 *337*	*31* *787*	*31.5* *800*	*31* *787*	*40.16* *1020*	-	*1123/1048* *510/476*
16 *400*	*15.24* *387*	*36* *914*	*36.5* *927*	*36* *914*	*41.34* *1050*	-	*1630/1487* *740/675*
18 *450*	*17.24* *438*	*38.5* *978*	*39* *991*	*38.5* *978*	*50.6* *1285*	-	*1773/1652* *805/750*
20 *500*	*19.25* *489*	*38.5* *978*	*39* *991*	*38.5* *978*	*58.27* *1480*	-	*1872/1729* *850/785*
24 *600*	*23.27* *591*	*51* *1295*	*51.5* *1308*	*51* *1295*	*68.11* *1730*	-	*2709/2434* *1230/1105*

The dimension and weights are for reference only and subject to change without notice.

1. For more dimensional information, please contact our sales representative.
2. “W” on above schematic is the diameter for hand wheel, the one without dimension on the table above is defaulted by gear operation.

DIMENSIONS AND WEIGHTS (Bolted Bonnet) *ASME CLASS 300 (PN 50)*

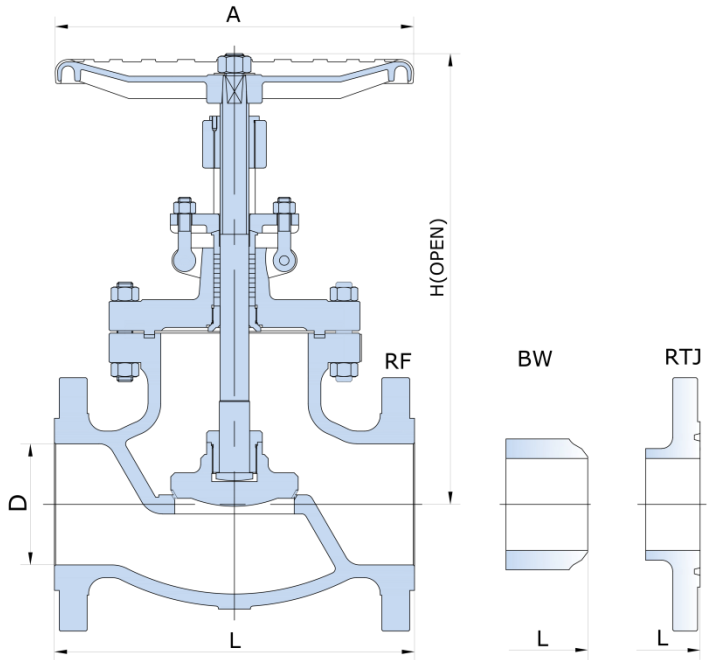

ASME CLASS 300 (PN 50)

Size *in/mm*	D	L			H	W	Weight
		RF	RTJ	BW			RF/BW *(lb/kg)*
2 *50*	2 *51*	*10.5* *267*	*11.14* *283*	*10.5* *267*	*14.72* *374*	*7.87* *200*	*64/57* *29/26*
2 ½ *65*	2.5 *64*	*11.5* *292*	*12.13* *308*	*11.5* *292*	*15.55* *395*	*9.84* *250*	*84/68* *35/31*
3 *80*	3 *76*	*12.5* *318*	*13.15* *334*	*12.5* *318*	*17.76* *451*	*11.81* *300*	*104/90* *47/41*
4 *100*	4 *100*	*14* *356*	*14.65* *372*	*14* *356*	*20.16* *512*	*13.78* *350*	*123/112* *56/51*
5 *125*	5 *125*	*15.75* *400*	*16.38* *416*	*15.75* *400*	*21.26* *540*	*13.78* *350*	*148/130* *67/59*
6 *150*	6 *150*	*17.5* *444*	*18.11* *460*	*17.5* *444*	*25* *635*	*17.72* *450*	*278/253* *126/115*
8 *200*	8 *203*	*22* *559*	*22.64* *575*	*22* *559*	*26.85* *682*	*19.7* *500*	*529/474* *240/215*
10 *250*	10 *250*	*24.5* *622*	*25.12* *638*	*24.5* *622*	*32.87* *835*	*19.7* *500*	*1233/1167* *560/530*
12 *300*	12 *305*	*28* *711*	*28.62* *727*	*28* *711*	*33.66* *855*	*19.7* *500*	*1586/1482* *720/673*
14 *350*	14 *337*	*33* *838*	*33.62* *854*	*33* *838*	*37.4* *950*	-	-
16 *400*	*15.24* *387*	*34* *864*	*34.65* *880*	*34* *864*	*43.3* *1100*	-	-
18 *450*	*17* *432*	*38.5* *978*	*39.13* *994*	*38.5* *978*	*45.28* *1150*	-	-
20 *500*	*19* *483*	*40* *1016*	*40.75* *1035*	*40* *1016*	*47.24* *1200*	-	-
24 *600*	*23* *584*	*53* *1346*	*53.86* *1368*	*53* *1346*	*51.18* *1300*	-	-

The dimension and weights are for reference only and subject to change without notice.

1. For more dimensional information, please contact our sales representative.
2. “W” on above schematic is the diameter for hand wheel, the one without dimension on the table above is defaulted by gear operation.

DIMENSIONS AND WEIGHTS (Bolted Bonnet) *ASME CLASS 600 (PN 100)*

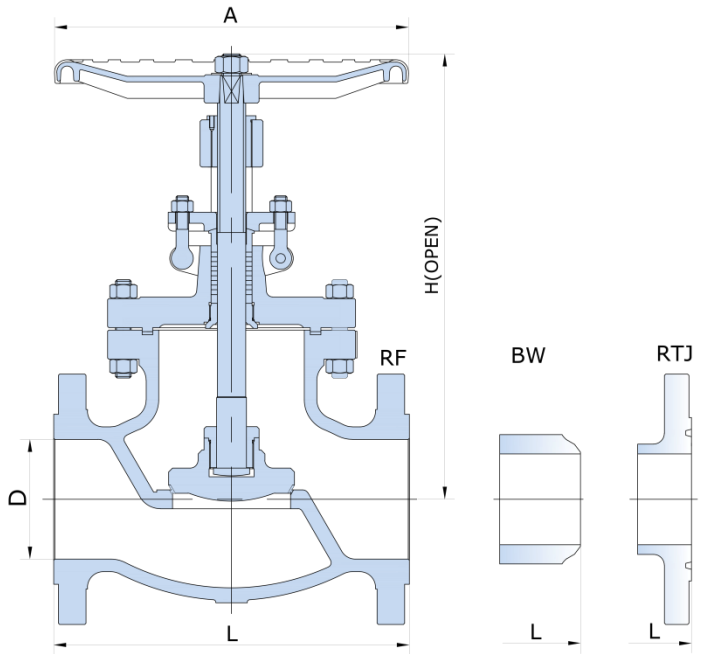

ASME CLASS 600 (PN 100)

Size *in/mm*	D	L			H	W	Weight
		RF	RTJ	BW			RF/BW *(lb/kg)*
2 *50*	2 *51*	11.5 *292*	11.63 *295*	11.5 *292*	*15.16* *385*	*441* *200*	*75/66* *34/30*
2 ½ *65*	2.5 *64*	13 *330*	13.13 *333*	13 *330*	*16.93* *430*	*551* *250*	*99/88* *50/45*
3 *80*	3 *76*	14 *356*	14.13 *359*	14 *356*	*18.7* *475*	*617* *280*	*152/137* *69/62*
4 *100*	4 *100*	17 *432*	17.13 *435*	17 *432*	*26.97* *685*	*661* *300*	*286/267* *130/121*
5 *125*	5 *125*	20 *508*	2012 *511*	20 *508*	*30.31* *770*	*881* *400*	*419/385* *190/175*
6 *150*	6 *150*	22 *559*	22.13 *562*	22 *559*	*35.43* *900*	*991* *450*	*551/518* *250/235*
8 *200*	*7.87* *200*	26 *660*	26.13 *663*	26 *660*	*35.94* *913*	*1100* *500*	*1002/947* *455/430*
10 *250*	9.76 248	31 *787*	31.13 *790*	31 *787*	*41.73* *1060*	*23.62* *600*	*1806/1692* *820/768*
12 *300*	*11.73* *298*	33 *838*	33.13 *841*	33 *635*	*48.23* *1225*		
14 *350*	*12.87* *327*	35 *889*	35.12 *891*	35 *889*	*52.28* *1328*	-	
16 *400*	*14.76* *375*	39 *991*	39.13 *994*	39 *991*	*61* *1550*	-	
18 *450*	*16.5* *419*	43 *1092*	43.13 *1095*	430 *1092*	*66.93* *1700*	-	
20 *500*	*18.27* *464*	47 *1194*	47.25 *1200*	47 *1194*	*70.87* *1800*	-	

The dimension and weights are for reference only and subject to change without notice.

1. For more dimensional information, please contact our sales representative.
2. “W” on above schematic is the diameter for hand wheel, the one without dimension on the table above is defaulted by gear operation.

Engineered Solutions ®

DIMENSIONS AND WEIGHTS (Bolted Bonnet) *ASME CLASS 900 (PN 150)*

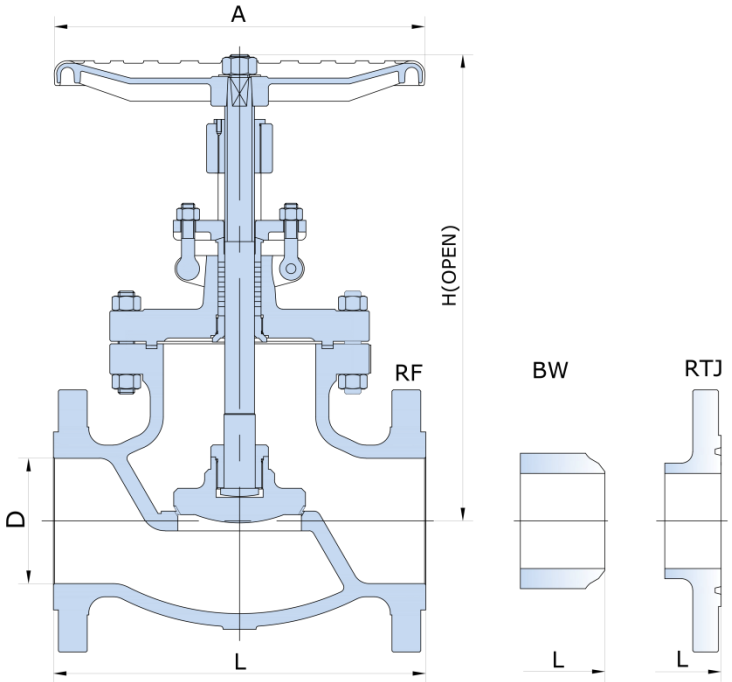

ASME CLASS 900 (PN 150)

Size *in/mm*	D	L			H	W	Weight
		RF	RTJ	BW			RF/BW *(lb/kg)*
2 *50*	*1.87* *47.5*	14.5 *368*	14.63 *371*	14.5 *368*	17.5 445	9.84 250	152/143 69/65
2 ½ *65*	*2.24* *57*	16.5 *419*	16.62 *422*	16.5 *419*	19.5 502	11.81 300	231/216 105/98
3 *80*	*2.87* *73*	15 *381*	15.13 *384*	15 *381*	21 533	13.78 350	238/220 108/100
4 *100*	*3.86* *98*	18 *457*	18.13 *460*	18 *457*	24.5 622	15.75 400	352/319 160/145
5 *125*	*4.76* *121*	22 *559*	22.13 *562*	22 *559*	27.16 690	17.72 450	617/562 280/255
6 *150*	*5.75* *146*	24 *610*	24.13 *613*	24 *610*	29.5 750	19.7 500	771/711 350/323
8 *200*	*7.48* *190*	29 *737*	29.13 *740*	29 *737*	36.5 927	19.7 500	1564/1487 710/675
10 *250*	9.37 238	33 *838*	33.13 *841*	33 *838*	44.88 1140	-	
12 *300*	*11.1* *282*	38 *965*	38.13 *968*	38 *965*	53.12 1350	-	
14 *350*	*12.24* *311*	40.5 *1029*	40.88 *1039*	40.5 *1029*	55.12 1400	-	
16 *400*	14 *356*	44.5 *1130*	44.88 *1140*	44.5 *1130*	63 1600	-	
18 *450*	*15.75* *400*	48 *1219*	48.5 *1232*	48 *1219*	68.9 1750	-	
20 *500*	*17.52* *445*	52 *1321*	52.5 *1334*	52 *1321*	72.83 1850	-	

The dimension and weights are for reference only and subject to change without notice.

1. For more dimensional information, please contact our sales representative.
2. “W” on above schematic is the diameter for hand wheel, the one without dimension on the table above is defaulted by gear operation.

DIMENSIONS AND WEIGHTS (Bolted Bonnet) *ASME CLASS 1500 (PN 250)*

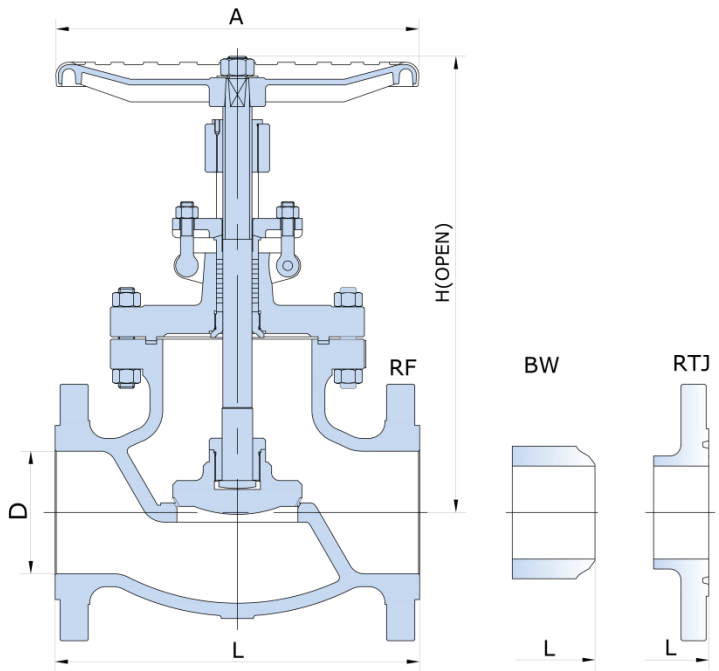

ASME CLASS 1500 (PN 250)

Size *in/mm*	D	L			H	W	Weight
		RF	RTJ	BW			RF/BW *(lb/kg)*
2 *50*	*1.87* *47.5*	14.5 *368*	*14.61* *371*	14.5 *368*	16.93 430	11.81 300	161/150 73/68
2 ½ *65*	*2.24* *57*	16.5 *419*	*16.61* *422*	16.5 *419*	19.69 500	13.78 350	253/231 115/105
3 *80*	*2.76* *70*	18.5 *470*	*18.62* *473*	18.5 *470*	29.53 750	15.75 400	324/291 147/132
4 *100*	*3.58* *91*	21.5 *546*	*21.61* *549*	21.5 *546*	32.28 820	17.72 450	436/319 198/182
5 *125*	*4.73* *111*	26.5 *673*	*26.61* *676*	26.5 *673*	34.65 880	19.7 500	771/731 350/332
6 *150*	*5.35* *136*	27.75 *705*	*28* *711*	27.75 *705*	35.83 910	23.6 600	1123/1068 510/485
8 *200*	*7* *178*	32.75 *832*	*33.15* *842*	32.75 *832*	39.96 1015	-	-
10 *250*	*8.74* *222*	39 *991*	*39.41* *1001*	39 *991*	40.75 1035	-	-
12 *300*	*10.35* *263*	44.5 *1130*	*45.12* *1146*	44.5 *1130*	53.15 1350	-	-
14 *350*	*11.38* *289*	49.5 *1259*	*50.24* *1276*	49.5 *1259*	57.48 1460	-	-
16 *400*	*13* *330*	54.5 *1384*	*55.35* *1406*	54.5 *1384*	61 1550	-	-
18 *450*	*14.61* *371*	60.5 *1537*	*61.38* *1559*	60.5 *1537*	64.57 1640	-	-
20 *500*	*16.38* *416*	65.5 *1664*	*66.38* *1686*	65.5 *1664*	66.93 1700	-	-

The dimension and weights are for reference only and subject to change without notice.

1. For more dimensional information, please contact our sales representative.
2. “W” on above schematic is the diameter for hand wheel, the one without dimension on the table above is defaulted by gear operation.

GLOBE VALVE

OVERVIEW (Pressure Seal Bonnet)

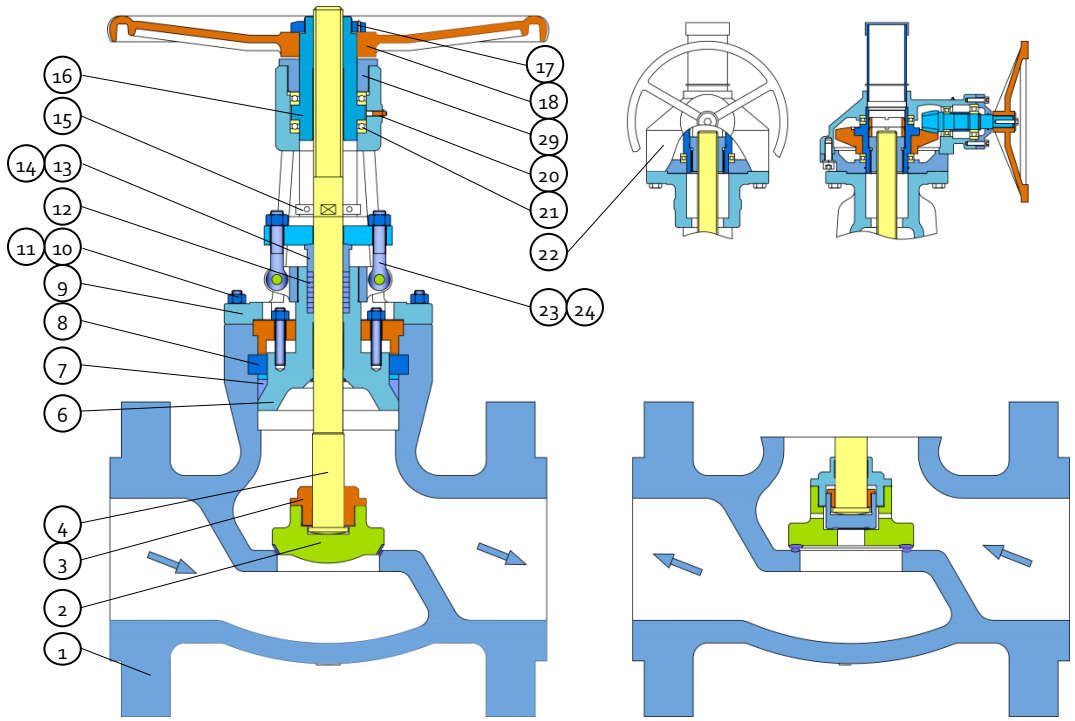

Single Disc Type

Double Disc Type

Part List

1	Body	6	Seal ring	11	Nut	16	Stem Nut	21	Bear
2	Disc	7	Split ring	12	Packing	17	Handwheel Nut	22	Gear
3	Disc Nut	8	Split ring	13	Gland	18	Handwheel	23	Eyes Bolt
4	Stem	9	Yoke	14	Gland flange	19	Bear Gland	24	Nut
5	Bonnet	10	Stud	15	Fixture Block	20	Grease Nipple Nut		

Standards

Design & Manufacture	ASME B16.34, MSS SP-144	
Face-to-face	ASME B16.10	
End Dimension	ASME B16.5(RF, RTJ) ASMEB16.47(RF,RTJ) ASME B16.25 (BW)	
Test & Inspection	API 598, ASME B16.34	
Typical Materials	Body, Bonnet,Disc	(Casting) A216 WCB, A351 CF3, CF8, CF3M, CF8M, A995 4A, 5A, A352 LCB, LCC, LC
		(Forging) A105, A350 LF2, LF3, LF5, A182 F304, F304L, F316, F316L, F51, F53, F5,F11,F22,F91, Monel, Inconel, Hastelloy
	Stem	A182 F6a, F304, F304L, F316, F316L, F51, F53,F55, Monel, Inconel, Hastelloy

DIMENSIONS AND WEIGHTS (Pressure Seal Bonnet) *ASME CLASS 900 (PN 150)*

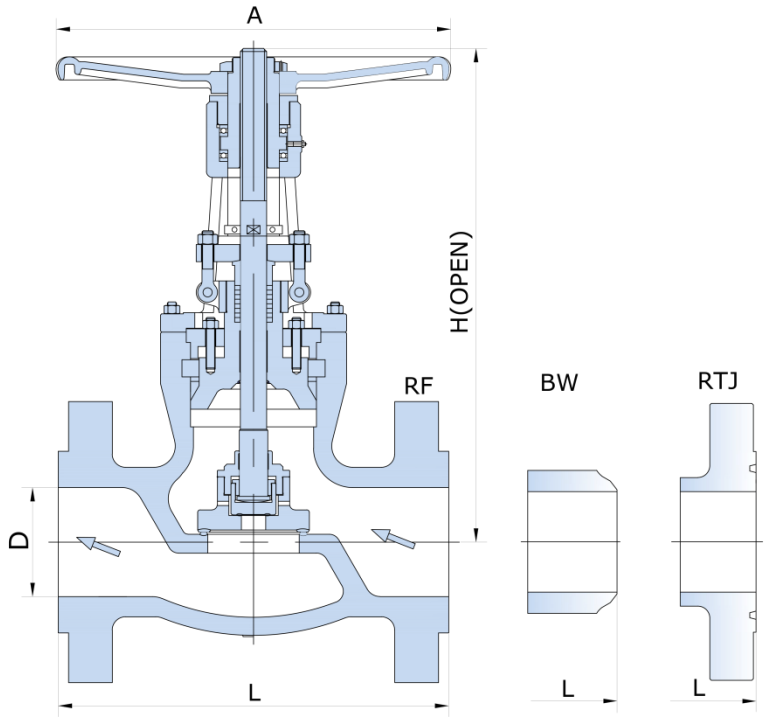

ASME CLASS 900 (PN 150)

Size *in/mm*	D	L			H	W	Weight
		RF	RTJ	BW			RF/BW *(lb/kg)*
2 *50*	*1.87* *47.5*	14.5 *368*	14.63 *371*	*8.5* *216*	17.5 445	9.84 250	152/143 69/65
2 ½ *65*	*2.24* *57*	16.5 *419*	16.62 *422*	*10* *254*	19.5 502	11.81 300	231/216 105/98
3 *80*	*2.87* *73*	15 *381*	15.13 *384*	*12* *305*	21 533	13.78 350	238/220 108/100
4 *100*	*3.86* *98*	18 *457*	18.13 *460*	*14* *356*	24.5 622	15.75 400	352/319 160/145
5 *125*	*4.76* *121*	22 *559*	22.13 *562*	*17* *432*	27.16 690	17.72 450	617/562 280/255
6 *150*	*5.75* *146*	24 *610*	24.13 *613*	*20* *508*	29.5 750	19.7 500	771/711 350/323
8 *200*	*7.48* *190*	29 *737*	29.13 *740*	*26* *660*	36.5 927	19.7 500	1564/1487 710/675
10 *250*	9.37 238	33 *838*	33.13 *841*	*31* *787*	44.88 1140	-	
12 *300*	*11.1* *282*	38 *965*	38.13 *968*	*36* *914*	53.12 1350	-	
14 *350*	*12.24* *311*	40.5 *1029*	40.88 *1038*	*39* *991*	55.12 1400	-	
16 *400*	*14* *356*	44.5 *1130*	44.88 *1140*	*43* *1092*	63 1600	-	
18 *450*	*15.75* *400*	48 *1219*	48.5 *1232*	-	68.9 1750	-	
20 *500*	*17.52* *445*	52 *1321*	52.5 *1334*	-	72.83 1850	-	

The dimension and weights are for reference only and subject to change without notice.

1. For more dimensional information, please contact our sales representative.
2. “W” on above schematic is the diameter for hand wheel, the one without dimension on the table above is defaulted by gear operation.

DIMENSIONS AND WEIGHTS (Pressure Seal Bonnet) *ASME CLASS 1500 (PN 250)*

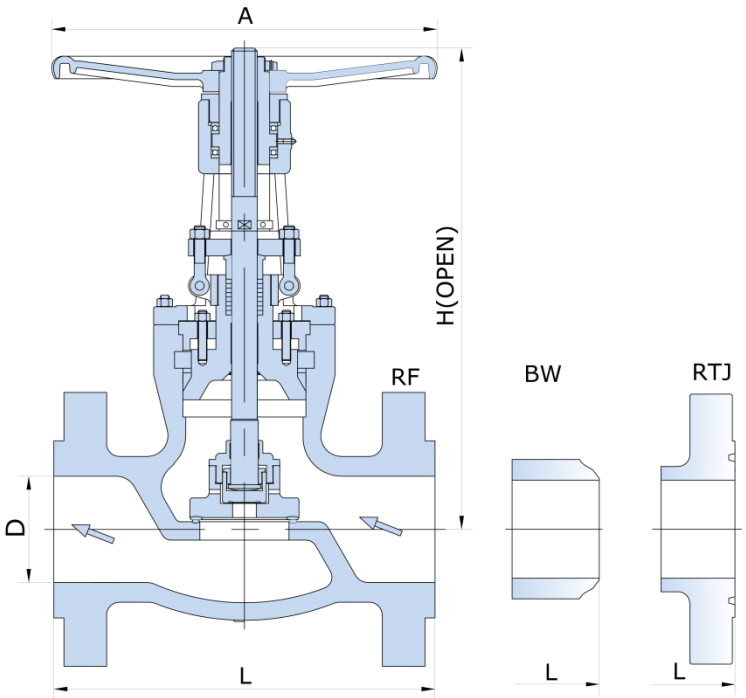

ASME CLASS 1500 (PN 250)

Size *in/mm*	D	L			H	W	Weight
		RF	RTJ	BW			RF/RTJ *(lb/kg)*
2 *50*	*1.87* *47.5*	14.5 *368*	*14.61* *371*	*8.5* *216*	16.93 430	11.81 300	161/150 73/68
2 ½ *65*	*2.24* *57*	16.5 *419*	*16.61* *422*	*10* *254*	19.69 500	13.78 350	253/231 115/105
3 *80*	*2.76* *70*	18.5 *470*	*18.62* *473*	*12* *305*	29.53 750	15.75 400	324/291 147/132
4 *100*	*3.58* *91*	21.5 *546*	*21.61* *549*	*16* *406*	32.28 820	17.72 450	436/319 198/182
5 *125*	*4.73* *111*	26.5 *673*	*26.61* *676*	*19* *483*	34.65 880	19.7 500	771/731 350/332
6 *150*	*5.35* *136*	27.75 *705*	*28* *711*	*22* *559*	35.83 910	23.6 600	1123/1068 510/485
8 *200*	*7* *178*	32.75 *832*	*33.15* *842*	*28* *711*	39.96 1015	-	-
10 *250*	*8.74* *222*	39 *991*	*39.41* *1001*	*34* *864*	40.75 1035	-	-
12 *300*	*10.35* *263*	44.5 *1130*	*45.12* *1146*	*39* *991*	53.15 1350	-	-
14 *350*	*11.38* *289*	49.5 *1259*	*50.24* *1276*	*42* *1067*	57.48 1460	-	-
16 *400*	*13* *330*	54.5 *1384*	*55.35* *1406*	*47* *1194*	61 1550	-	-
18 *450*	*14.61* *371*	60.5 *1537*	*61.38* *1559*	*53* *1346*	64.57 1640	-	-
20 *500*	*16.38* *416*	65.5 *1664*	*66.38* *1686*	*58* *1473*	66.93 1700	-	-

The dimension and weights are for reference only and subject to change without notice.

1. For more dimensional information, please contact our sales representative.
2. “W” on above schematic is the diameter for hand wheel, the one without dimension on the table above is defaulted by gear operation.

DIMENSIONS AND WEIGHTS (Pressure Seal Bonnet) *ASME CLASS 2500 (PN 420)*

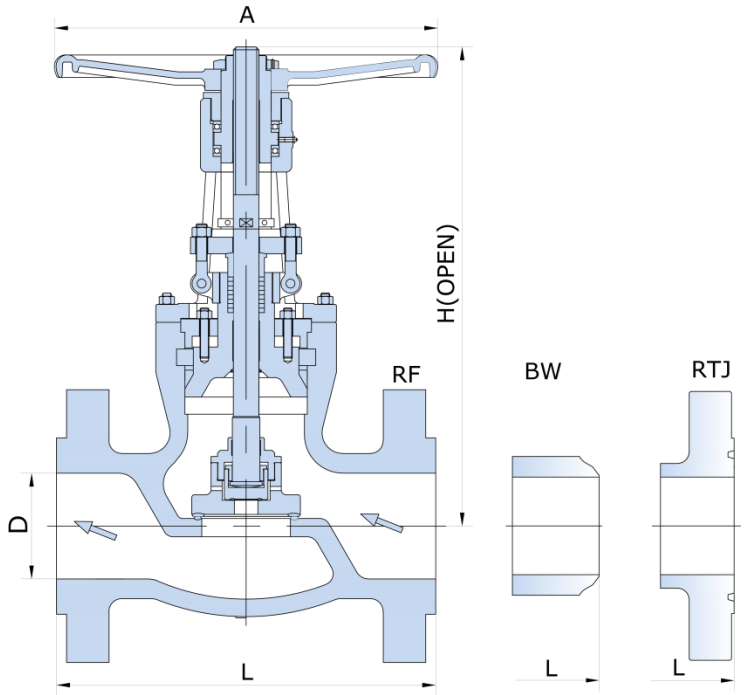

ASME CLASS 2500 (PN 420)

Size *in/mm*	D	L			H	W	Weight
		RF	RTJ	BW			RF/RTJ *(lb/kg)*
2 *50*	*1.5* *38*	17.75 *451*	17.88 *454*	*11* *279*	*19.5* *495*	*13.78* *350*	*258/163* *117/74*
2 ½ *65*	*1.89* *48*	20.32 *508*	20.56 *514*	*13* *330*	*21.65* *550*	*17.72* *450*	*341/286* *155/130*
3 *80*	*2.24* *57*	22.75 *578*	23 *584*	*14.5* *368*	*23.74* *603*	*17.72* *450*	*430/251* *195/114*
4 *100*	*2.87* *73*	26.5 *673*	26.88 *683*	*18* *457*	*26.97* *685*	*19.69* *500*	*573/441* *260/200*
5 *125*	*3.62* *92*	31.26 *794*	31.77 *807*	*521* *33*	*33.46* *850*	*23.62* *600*	*1674/1167* *760/530*
6 *150*	*4.37* *111*	36 *914*	36.5 *927*	*24* *610*	*38.23* *971*	*23.62* *600*	*2737/1689* *1238/767*
8 *200*	*5.75* *146*	40.25 *1022*	40.88 *1038*	*30* *762*	*43.31* *1100*	-	-
10 *250*	*7.27* *184*	50 *1270*	50.88 *1292*	*36* *914*	*47.24* *1200*	-	-
12 *300*	*8.62* *219*	56 *1422*	56.88 *1444*	*41* *1041*	*60* *1524*	-	-

The dimension and weights are for reference only and subject to change without notice.

1. For more dimensional information, please contact our sales representative.
2. “W” on above schematic is the diameter for hand wheel, the one without dimension on the table above is defaulted by gear operation.

GLOBE VALVE

VALVE FIGURE NUMBER — *HOW TO ORDER*

	Nominal Size	Valve Type	Pressure Rating	End Conn.	Construct-ion	Body Material	Trim Material	Seat	O-ring	Operation Mode
	A	B	C	D	E	F	G	H	I	J
e.g.	0 8	G L	6	R	1	C 4	0 5	N	0	G

NPS 8 Class 600,Globe Valve, Straight pattern, Bolt bonnet, Raised Face, WCB body, Trim 5#, Non Renewable Seat, No O-ring, Gear Operated.

A Nominal Size

00	Modified	**02**	2 (DN 50)	**07**	8 RB	**19**	20 RB	**31**	32 RB
F1	3/8 (DN 10)	**R2**	2 RB	**08**	8 (DN 200)	**20**	20 (DN 500)	**32**	32 (DN 800)
F2	1/2 (DN 15)	**F6**	2 ½ (DN 65)	**09**	10 RB	**21**	22 RB	**33**	34 RB
0R	1/2 RB	**3R**	2 ½ RB	**10**	10 (DN 250)	**22**	22 (DN 550)	**34**	34 (DN 850)
F3	3/4 (DN 20)	**03**	3 (DN 80)	**11**	12 RB	**23**	24 RB	**35**	36 RB
R0	3/4 RB	**R3**	3 RB	**12**	12 (DN 300	**24**	24 (DN 600)	**36**	36 (DN 900)
01	1 (DN 25)	**04**	4 (DN 100)	**13**	14 RB	**25**	26 RB	**37**	38 RB
R1	1 RB	**R4**	4 RB	**14**	14 (DN 350)	**26**	26 (DN 650)	**38**	38 (DN 950)
F4	1 ¼ (DN 32)	**05**	5 (DN 125)	**15**	16 RB	**27**	28 RB	**39**	40 RB
1R	1 ¼ RB	**R5**	5 RB	**16**	16 (DN 400)	**28**	28 (DN 700)	**40**	40 (DN 1000)
F5	1 ½ (DN 40)	**06**	6 (DN 150)	**17**	18 RB	**29**	30 RB	**41**	42 RB
2R	1 ½ RB	**R6**	6 RB	**18**	18 (DN 450)	**30**	30 (DN 750)	**...**	More as such

B Valve Type

GL Globe Valve

C Pressure Rating

0	Modified	**7**	Class 2500
1	Class 150	**9**	Class 900
3	Class 300	**8**	Class 800
5	Class 1500	**2**	Class 125
6	Class 600	**4**	Class 400

D End Connection

X	Other	**B**	Butt-Weld (BW)
R	RF Flanged	**S**	Socket-Weld (SW)
J	RTJ Flanged	**N**	SW x FNPT
F	FF Flanged		
T	FNPT		

E Construction

1 Straight pattern, Bolt bonnet, OS&Y
2 Straight pattern, Welded Bonnet, OS&Y
3 Straight pattern, Pressure Seal, OS&Y
4 Y- pattern, Bolt bonnet, OS&Y
5 Y- pattern, Welded Bonnet, OS&Y
6 Y- pattern, Pressure Seal, OS&Y
7 Straight pattern, bellow seal, OS&Y

F Body Material

X0	Other	**E7**	A182 F91	**S6**	A351 CF8M	**A1**	B564 N04400(Monel 400）
C1	A105N	**E8**	A217 C12A	**S7**	A182 F316L	**A2**	A494 M-35-1
C2	A216 WCA	**L1**	A350 LF1	**S8**	A351 CF3M	**A3**	B865 N05500(Monel K500）
C4	A216 WCB	**L2**	A352 LCA	**S9**	A182 F347	**A4**	B462 N08020(Alloy 20）
C6	A216 WCC	**L3**	A350 LF2	**S0**	A351 C F8C	**A5**	A351 CN7M(Cast Alloy 20）
M1	A182 F1	**L4**	A352 LC2	**SA**	A182 F317	**A6**	A990 CN3MCU(Cast Alloy 20）
M2	A217 WC1	**L5**	A350 LF3	**SB**	A182 F321	**A7**	B462 N10276 (Hastelloy C276)
M3	A182 F2	**L6**	A352 LC3	**SC**	A182 F304H	**A8**	A494 CW12MW(Cast Hastelloy Alloy C276）
M4	A217 WC4	**L7**	A350 LF5	**SD**	A351 CF10	**B1**	B564 N06625 (Alloy Inconel 625)
M5	A182 F12 CL 2	**L8**	A352 LCB	**SE**	A182 F316H	**B2**	A494 CW6MC(Cast Inconel Alloy 625）
M6	A217 WC5	**L9**	A350 LF6	**SF**	A351 CF10M	**B3**	B564 N08825 (Alloy Inconel 825)
M7	A182 F11 CL 2	**LA**	A350 LF9	**SG**	A182 F304(L) Dual	**B4**	A494 CW5MCUC(Cast Inconel Alloy 825）
M8	A217 WC6	**LB**	A352 LC9	**SH**	A182 F316(L) Dual	**H1**	B62 C83600 Composition Bronze Casting
M9	A182 F22 CL 3	**LD**	A352 LCC	**D1**	A182 F51	**H2**	B148 C95400 Al-Bronze Casting
M0	A217 WC9	**S1**	A182 F304	**D2**	A995 4A	**H3**	B148 C95800 Al-Bronze Casting
E1	A182 F5	**S2**	A351 CF8	**D3**	A182 F53	**H4**	B150 C63000 Al-Bronze Rod, Bar
E2	A217 C5	**S3**	A182 F304L	**D4**	A995 5A	**H5**	B150 C63200 Al-Bronze Rod, Bar
E5	A182 F9	**S4**	A351 CF3	**D5**	A182 F55	**F1**	A395 65-45-15 Ductile Iron
E6	A217 C12	**S5**	A182 F316	**D6**	A995 6A	**F2**	A536 65-45-12 Ductile Iron

Engineered Solutions

VALVE FIGURE NUMBER(CONT'D)

HOW TO ORDER

	Nominal Size	Valve Type	Pressure Rating	End Conn.	Construct-ion	Body Material	Trim Material	Seat	O-ring	Operation Mode
	A	B	C	D	E	F	G	H	I	J
e.g.	0 6	G A	6	R	1	C 4	0 5	R	0	H

NPS 8 Class 600,Globe Valve, Straight pattern, Bolt bonnet, Raised Face, WCB body, Trim 5#, Non Renewable Seat, No O-ring, Gear Operated.

G Trim Material

- **00** Other
- **01** 13Cr/13Cr/410
- **02** 304/304/304
- **03** 310/310/310
- **04** Hard 13Cr/Hard 13Cr/410
- **05** Stellite 6/Stellite 6/410
- **5A** Ni-Cr/Ni-Cr/410
- **06** 13Cr/Cu-Ni/410
- **07** 13Cr/Hard 13Cr /410
- **08** 13Cr/Stellite 6/410
- **8A** 13Cr/Ni-Cr/410
- **09** Monel/Monel/Monel
- **10** 316/316/316
- **0A** Stellite 6/13Cr/410
- **0B** Stellite 6/316/316
- **11** Monel/Stellite 6/Monel
- **12** 316/Stellite 6/316
- **13** Alloy 20/Alloy 20 /Alloy 20
- **14** Alloy 20/Stellite 6/Alloy 20
- **15** Stellite 6/Stellite 6/304
- **16** Stellite 6/Stellite 6/316
- **17** Stellite 6/Stellite 6/347
- **18** Stellite 6/Stellite 6/Alloy 20
- **20** 304L /304L /304L
- **21** 316L /316L /316L
- **22** UNS 32100/UNS 32100/F321
- **23** UNS S32760/UNS S32760/F55
- **24** UNS S31803/UNS S31803/F51
- **25** UNS S32750/UNS S32750/F53
- **32** 316L /Stellite 6/316L
- **33** Stellite 6/Stellite 6/316L
- **34** 304L /Stellite 6/304L
- **35** Stellite 6/Stellite 6/304L
- **43** 304/Stellite 6/304
- **44** Inconel 625/Inconel 625/Inconel 625
- **45** 317/317/317
- **46** 321/321/321
- **47** 347/347/347
- **48** 304H/304H/304H（ASTM A479）
- **49** 316H/316H/316H（ASTM A479）
- **50** 304(L) Dual/304(L) Dual/304(L) Dual
- **51** 316(L) Dual/316(L) Dual/316(L) Dual

H Seat

- **H** HNBR
- **E** EPDM
- **V** VITON
- **B** BUNA
- **R** Renewable Metal
- N Non Renewable Metal

I O-Ring

- **0** No o-ring

J Operation

- **H** Handwheel
- **V** Handwheel w/ locking device
- **G** Gear
- **F** Gear w/ locking device
- **C** Gear w/ chain
- **B** Bare stem
- **P** Pneumatic
- **N** Pneumatic-Hydraulic
- **E** Electric
- **Q** Other

HOW THE FIGURE NUMBER SYSTEM WORKS

Introduction. Figure number system uses a code consisting 14 digits of letters and numbers to represent the specification of a valve of certain specification. Among 14 digits, they are separated into 10 groups identified by letters from A to J. Each group represents a parameter of a valve, together they contain almost all the essential parameters of the valve.

Uses. Using the figure number system to generate a code is easy. Under each group, the code is shown on the left while on the right is the meaning of the code. Start by selecting a code from group A, through group J. If the specification of the valve is not listed, select the code for "Other ". The total length of the figure number shall be exactly 14 digits.

Cautions. It is advised that you have as detailed the specification as possible to generate a figure number, which means eliminating "Other". If you don't have enough specification or information about the valve you are ordering, or you're not sure how to use the system to generate a figure number, contact one of our sales representatives for help.

Note: FBV reserves the right to make any modifications without notice.

Offshore

Pipeline

Engineered Solutions®

Onshore

Refinery

IMPORTANT NOTICE

- All dimensions in inches not listed in standards are converted from millimeters. Weights in lbs (pounds) are converted from kilograms.
- Data listed in the catalog, including dimensions, weights, specifications and other valve related data are intended to provide general information and guidance only.
- FBV Inc. assumes no responsibility for errors or inadequacy relevant to any information provided in this catalog. Any information provided in this catalog is subject to change without notice.

Engineered Solutions®

CONTACT US

E : sales@fbvalve.com
W: www.fbvalve.com

©FBV Inc. All rights reserved.

FBV INC.(USA)
2121 FM 359 South
Brookshire, Texas 77423 USA
T: +1 832-203-5459

FBV INC.(China)
815 Bihu Industrial Zone
Lishui, Zhejiang 323000
T: +86 (577) 8836-7328

FBV Latam INC.
Obarrio, Calle 54 Este, PH Atrium
Tower, Piso 23, Ofc. 23-08
Ciudad de Panama Panama
T: +507-388-7480

FBV (SEA) PTE LTD.
1 Scotts Road, #24-10,
Shaw Centre
Singapore 228208
T: +65-6681-5772